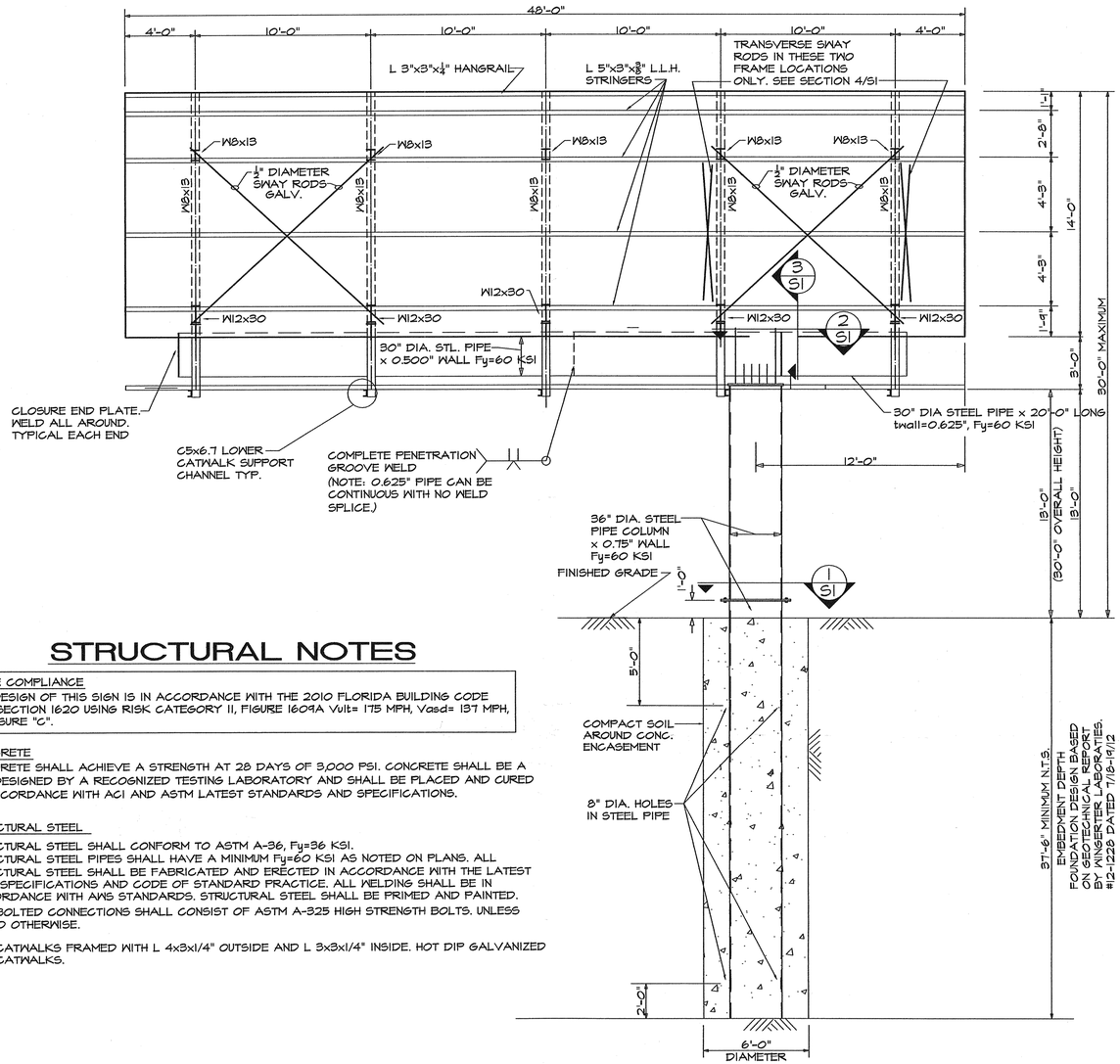

ELEVATION OF SIGN

SCALE: 1/4" = 1'-0"

STRUCTURAL NOTES

CODE COMPLIANCE

THE DESIGN OF THIS SIGN IS IN ACCORDANCE WITH THE 2010 FLORIDA BUILDING CODE AND SECTION 1620 USING RISK CATEGORY II, FIGURE 1609A Vult= 175 MPH, Vasd= 137 MPH, EXPOSURE "C".

CONCRETE

CONCRETE SHALL ACHIEVE A STRENGTH AT 28 DAYS OF 3,000 PSI. CONCRETE SHALL BE A MIX DESIGNED BY A RECOGNIZED TESTING LABORATORY AND SHALL BE PLACED AND CURED IN ACCORDANCE WITH ACI AND ASTM LATEST STANDARDS AND SPECIFICATIONS.

STRUCTURAL STEEL

STRUCTURAL STEEL SHALL CONFORM TO ASTM A-36, Fy=36 KSI.
STRUCTURAL STEEL PIPES SHALL HAVE A MINIMUM Fy=60 KSI AS NOTED ON PLANS. ALL STRUCTURAL STEEL SHALL BE FABRICATED AND ERECTED IN ACCORDANCE WITH THE LATEST AISC SPECIFICATIONS AND CODE OF STANDARD PRACTICE. ALL WELDING SHALL BE IN ACCORDANCE WITH AWS STANDARDS. STRUCTURAL STEEL SHALL BE PRIMED AND PAINTED.

ALL BOLTED CONNECTIONS SHALL CONSIST OF ASTM A-325 HIGH STRENGTH BOLTS. UNLESS NOTED OTHERWISE.

ALL CATWALKS FRAMED WITH L 4x3x1/4" OUTSIDE AND L 3x3x1/4" INSIDE. HOT DIP GALVANIZED ALL CATWALKS.

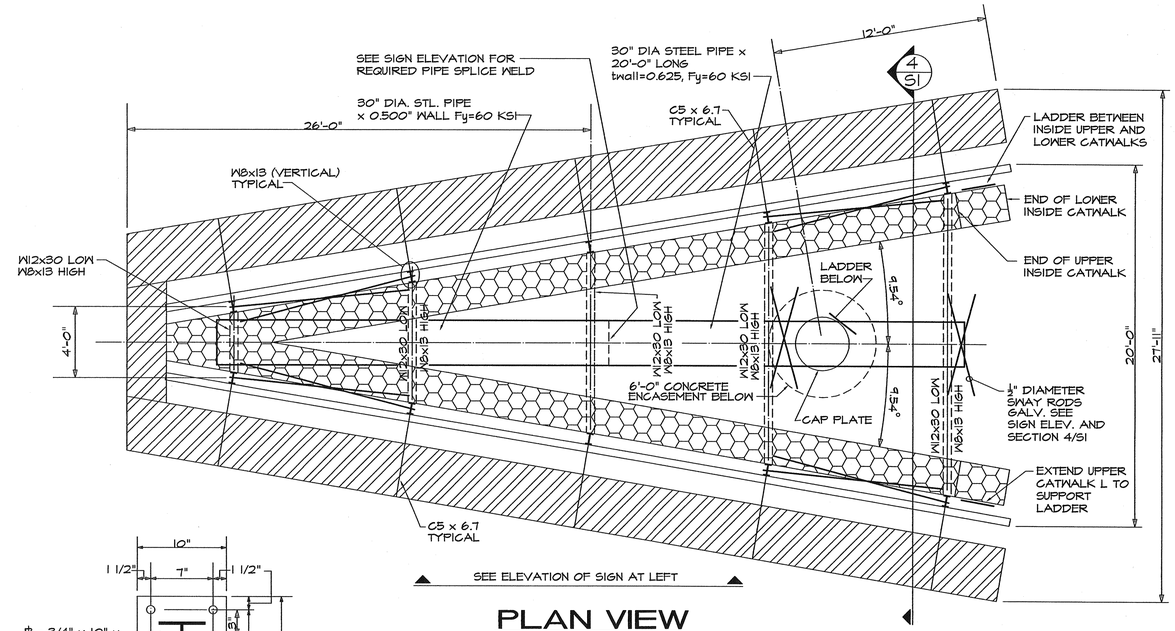

PLAN VIEW

SCALE: 1/4" = 1'-0"

DENOTES PREFABRICATED LOWER CATWALK 3'-0" TYPICAL WIDTH RATED AT 30 PSF LIVE LOAD SUPPORTED ON C5x6.7. SEE STRUCTURAL NOTES THIS SHEET FOR ADDITIONAL CATWALK FRAMING INFORMATION.

DENOTES PREFABRICATED UPPER AND LOWER INSIDE CATWALKS 2'-0" TYPICAL WIDTH RATED AT 30 PSF LIVE LOAD SUPPORTED ON W8 AND W12 BEAMS. SEE STRUCTURAL NOTES THIS SHEET FOR ADDITIONAL CATWALK FRAMING INFORMATION.

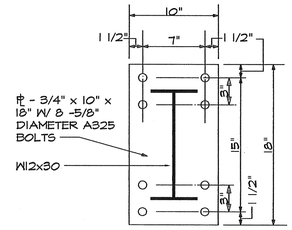

SECTION 6/S1

SCALE: 1 1/2" = 1'-0"

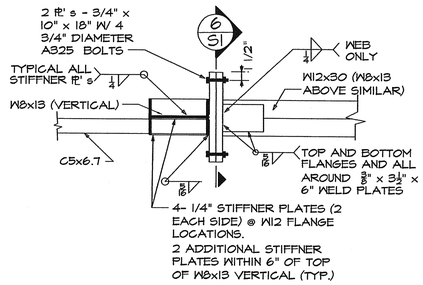

SECTION 5/S1

SCALE: 1 1/2" = 1'-0"

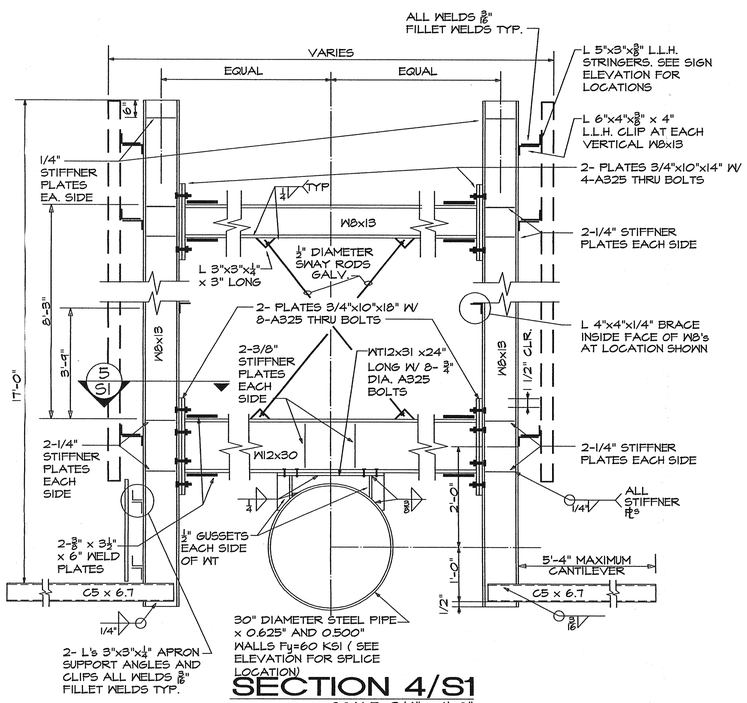

SECTION 4/S1

SCALE: 3/4" = 1'-0"

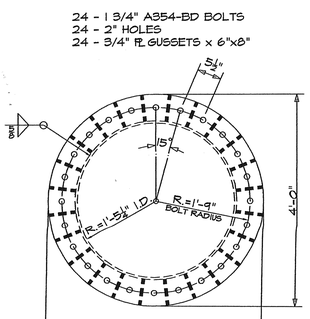

SECTION 1/S1

SCALE: 3/4" = 1'-0"

PLAN VIEW

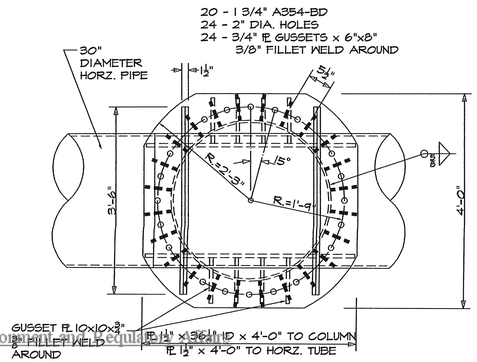

SECTION 2/S1

SCALE: 3/4" = 1'-0"

PLAN VIEW

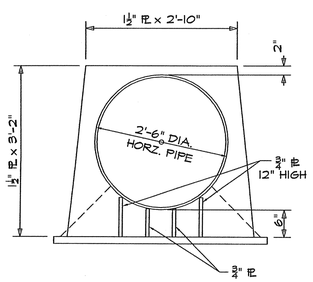

SECTION 3/S1

SCALE: 3/4" = 1'-0"

ELEVATION

DAVID G. STANBRA, PE
STRUCTURAL CONSULTING ENGINEER
Key West Professional Centre
1342 Colonial Blvd., Suite 61
Fort Myers, Florida 33907
PE 35303
tel. 239-275-4475 fax. 239-275-6883

3/4 FLAGGED V- SIGN

11491 N.W. 27th AVENUE MIAMI, FLORIDA

FOR: CARTER PRITCHETT HODGES, INC. FLORIDA OUTDOOR ADVERTISING CO.

D. Stanbra AUG 9/12

DATE: AUGUST 9, 2012

SHEET: S1 OF S1

212-12ASI

Miami Dade County Public Schools Permitting, Environmental & Land Equities
0000834592 - 9/11/2012 9:04:45 AM
S1-09062012-S1
Examiner Date Time Stamp Exp. Trade Stamp Name
Carlos Labiste 9/10/2012 12:00:00 PM A STRU Approved