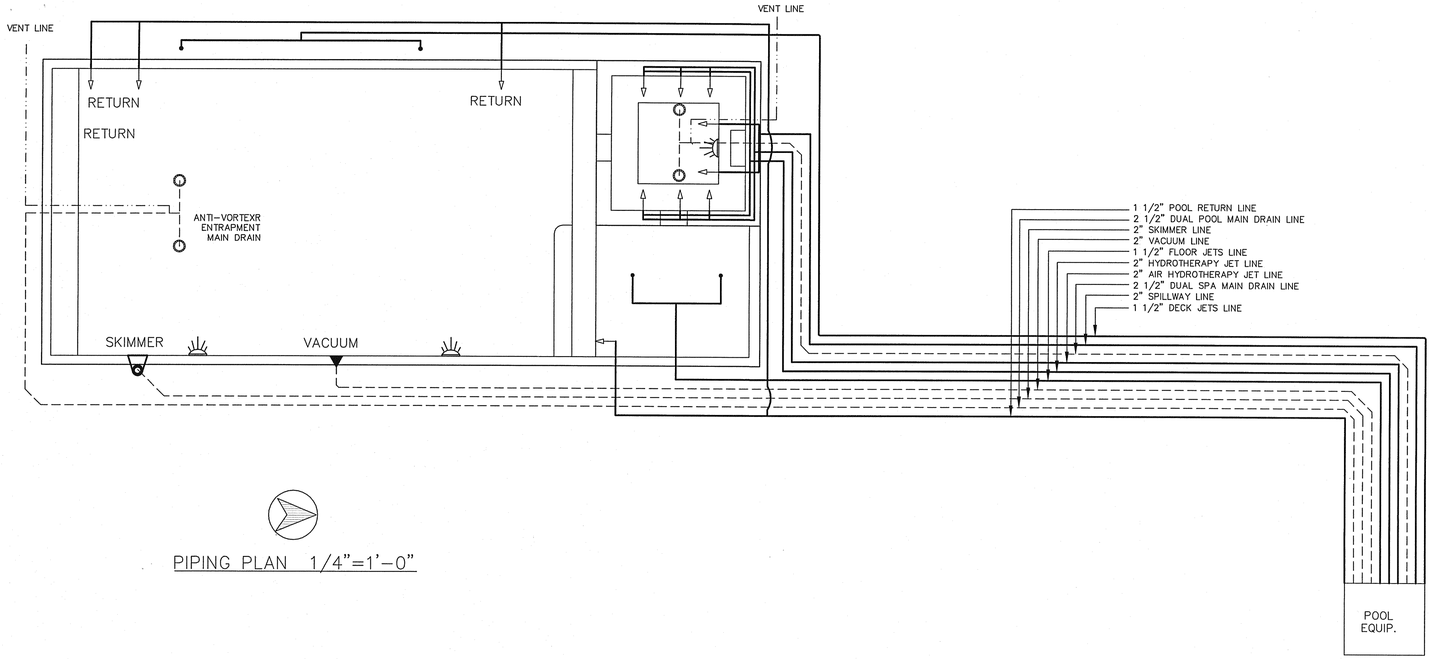

PIPING PLAN 1/4"=1'-0"

POOL LOAD CALCULATIONS

POOL PUMP AT 100%.....=1,492 W.
BLOWER PUMP AT 100%.....=1492 W.
HEAT PUMP AT 100%.....=5,900 W.
POOL/SPA LIGHT AT 100%.....=143 W.
TOTAL.....=9,027 W.
TOTAL CONNECTED LOAD=9,027 WATTS/240 VOLTS.....=38 AMPS

TOTAL LOAD CALCULATIONS

GEN. LIGHTING: 3,410 SF x 3 WATTS/SF .....=10,230 W.
GEN. APPLIANCES & WATER HEATER.....=28,000 W.
POOL PANEL AT 100% .....=9,027 W.
TOTAL.....=47,257 W.
FIRST 10 KW AT 100 % .....=10,000 W.
REMAINDER 37,257 WATTS @ 40 % .....=14,902 W.
TOTAL LOAD @ DEMAND FACTOR.....=24,902 W.
A/C OR HEATING AT 100 % .....=10,000 W.
TOTAL CONNECTED LOAD= 34,902 WATTS/240 VOLTS= 145 AMPS

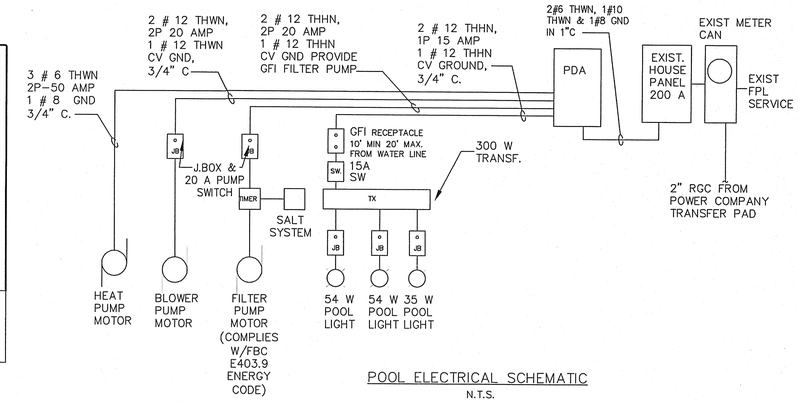

POOL ELECTRICAL SCHEMATIC
N.T.S.

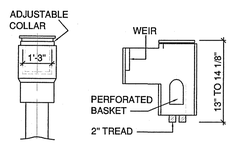

SKIMMER DETAIL
ACCORDING TO (424.221.2)

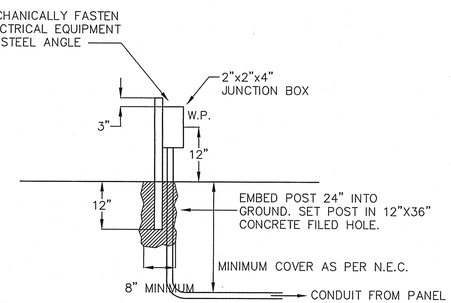

NOTE:
ALL MATERIAL TO BE HOT DIP GALVANIZED.

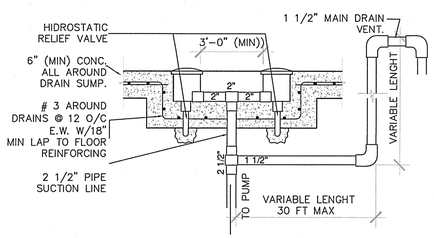

DOUBLE MAIN DRAIN (DETAIL)
ACCORDING TO (424.26.6.3)(424.26.6.4)
(424.221.2)

PIPE SIZE	PRESSURE FLOW CAPACITY (10FPS)	SUCTION FLOW CAPACITY(8FPS)
1.5"	60 gpm	49 gpm
2.0"	100 gpm	80 gpm
2.5"	150 gpm	110 gpm
3.0"	220 gpm	180 gpm

UNISTRUT MOUNTING DETAIL
N.T.S.

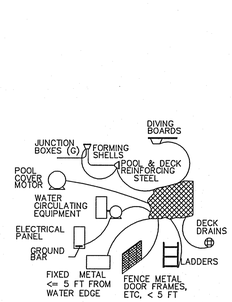

COMMON BONDING GRID DETAIL
N.T.S.

COMMON BONDING GRID PERMITTED TO BE:
. STRUCTURAL REINFORCING STEEL RODS THAT ARE BONDED TOGETHER
. WALL OF BOLTED OR WELDED METAL POOL.
. SOLID COPPER CONDUCTOR NO. 8 OR LARGER

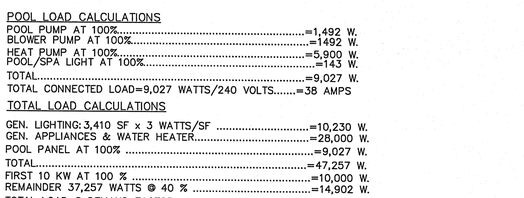

ALTERNATIVE DESIGN EQUIVALENT TO NEC 680.26 (C)
N.T.S.

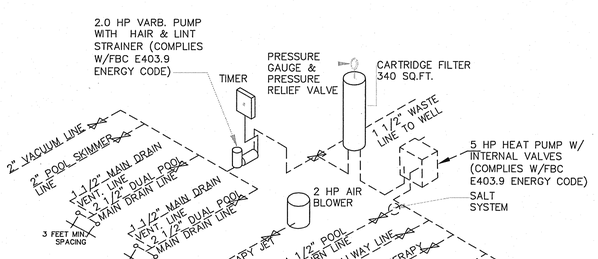

POOL/SPA FILTRATION SYSTEM EQUIPMENT SCHEMATIC

PUMPING FLOW RATES @ 60 TDH

3/4 hp =	55 gpm
1.0 HP =	75 gpm
1.5 HP =	90 gpm
2.0 HP =	95 gpm
2.5 HP =	115 gpm
3.0 HP =	140 gpm

BASED UPON STA-RITE MAX-E-GLASS II SELF PRIMING PUMP

VENT PIPE MAX. LENGTH

HP	FLOW RATE	VENT SIZES	MAX LENGTH
3/4	55 gpm	1 1/2"	29 LF
1	75 gpm	1 1/2"	40 LF
1.5	90 gpm	1 1/2"	49 LF
2	95 gpm	1 1/2"	51 LF
2.5	115 gpm	1 1/2"	62 LF
3	140 gpm	1 1/2"	76 LF

-Vent is designed to evacuate suction in 3 sec. or less per FBC 424
-This safety vacuum relief system is a non-mechanical vent system that will limit the transmission of suction at the outlet to a maximum of 4.5" of mercury.

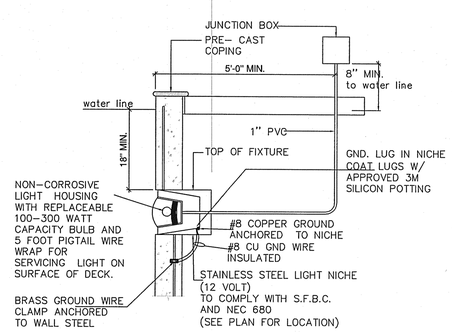

SECTION UNDER WATER LANDING.

FLOTATION ANALYSIS

TOP OF POOL WALL ELEVATION	10.50'
COUNTY FLOOD CRITERIA	7.50'
LOW POINT POOL LEVEL	4.67'
POOL UPLIFT FORCE	2.83'
DEDUCT 2.00' ALLOWED FOR USE OF 2" HYDROSTATIC PRESSURE RELIEF VALVE (-2.00')	(-)2.00'
RESULTANT UPLIFT FORCE	0.83'
SLAB THICKNESS REQ'D =	6"

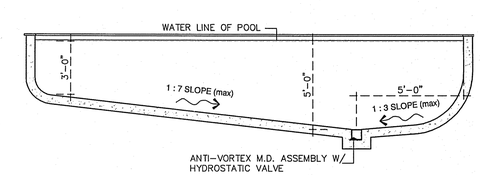

TYPICAL POOL SECTION
NTS

Miami Dade County Department of Regulatory And Economic Resources
0000030806 - 12/13/2012 12:36:15 PM
SP-2-12062012.PDF

Examiner	Date Time Stamp	Disp.	Trade	Stamp Name
Ron Hampton	12/10/2012 8:1[illegible]	[illegible]	[illegible]	[illegible] Approved
Steven Gilbert	12/7/2012 1:31:56 PM	A	ELEC	Approved
Jeanne Clarke	12/10/2012 9:50:27 AM	A	STRU	Approved
Ernesto Cabrera	12/7/2012 2:15:33 PM	A	BLDG	Approved

Pools By German
2020 S.W. 118 AVENUE
MIAMI, FLORIDA 33175
PH. 305-220-0772
CPC-057263

DESIGNED BY:
PROL POOL, INC.
TAMARA / ALEX PROL
Office: (786) 571 1200 / (786) 406-4158
Fax: (305) 228 0087
Email: prolpool@bellsouth.net

PROL POOL,INC© COPYRIGHT
THIS DRAWING IS THE PROPERTY OF PROL POOL,INC UNLESS OTHERWISE PROVIDED FOR BY CONTRACT. THE CONTENTS OF THIS DRAWING ARE CONFIDENTIAL AND SHALL NOT BE TRANSMITTED TO ANY PARTY EXCEPT AS AUTHORIZED TO BY THE ENGINEERS OF RECORD.

PROJECT: Mr. & Mrs. BROE
PROJECT ADDRESS: 7830 SW 85 CT. MIAMI FL.
OWNER: Mr. & Mrs. BROE
OWNER ADDRESS: 7830 SW 85 CT. MIAMI FL.
LOT:
BLOCK:
OWNER PHONE:

project number:

sheet title
PIPING PLAN & DETAILS

revisions

issued for:

issue date: 11-26-12

drawn by: T.P.
approved by: T.P.

scale: AS INDICATED

seal

EMILIANO OROZCO, P.E.
Florida Registration No. 66341
817 SW 122 AVE. MIAMI FL. 33184
(786) 715 7125

sheet number
SP-2

sheet: 2 of 2