FLORIDA DEPARTMENT OF STATE
DIVISION OF CORPORATIONS

Detail by Officer/Registered Agent Name

Florida Non Profit Corporation

LAKES OF THE MEADOW MASTER MAINTENANCE ASSOCIATION, INC.

Filing Information

Document Number	759252
FEI/EIN Number	592165738
Date Filed	07/22/1981
State	FL
Status	ACTIVE
Last Event	CORPORATE MERGER
Event Date Filed	01/22/1997
Event Effective Date	NONE

Principal Address

4450 S.W. 152 AVENUE
MIAMI FL 33185 US

Changed 03/02/1999

Mailing Address

11981 SW 144 CT
SUITE #201
MIAMI FL 33186

Changed 06/22/2005

Registered Agent Name & Address

SKRLD, INC.
201 ALHAMBRA CIRCLE
SUTIE 1102
CORAL GABLES FL 33134 US

Name Changed: 07/09/1991

Address Changed: 07/09/1991

Officer/Director Detail

Name & Address

Title V

WANDER, JEFFREY
4829 SW 154 AVENUE
MIAMI FL 33185

Title P

BRADDOCK, VIRGINIA

Miami Dade County Building Department
0000451346 12/1/2009 12:04:15 PM
GENERAL
Examiner | Date Time Stamp | Disp. | Trade | Stamp Name
Stephen Kovach 10/19/2009 4:04:29 PM A ELEC Approved

5029 SW 151 PLACE
MIAMI FL 33185

Title S

RODRIGUEZ, EDUARDO
15343 SW 42 TERRACE
MIAMI FL

Title D

SIERRA, DAVID J
4266 SW 153 PL
MIAMI FL 33185

Title T

ALBUERNE, LUIS
14735 SW 54 TERRACE
MIAMI FL

Title D

BACHMANN, JORGE A
15323 SW 52 TERRACE
MIAMI FL 33185

Annual Reports

Report Year	Filed Date
2007	02/19/2007
2008	04/21/2008
2009	03/10/2009

Document Images

03/10/2009 -- ANNUAL REPORT	View image in PDF format
04/21/2008 -- ANNUAL REPORT	View image in PDF format
02/19/2007 -- ANNUAL REPORT	View image in PDF format
01/30/2006 -- ANNUAL REPORT	View image in PDF format
03/04/2005 -- ANNUAL REPORT	View image in PDF format
02/16/2004 -- ANNUAL REPORT	View image in PDF format
03/07/2003 -- ANNUAL REPORT	View image in PDF format
03/25/2002 -- ANNUAL REPORT	View image in PDF format
03/01/2001 -- ANNUAL REPORT	View image in PDF format
01/27/2000 -- ANNUAL REPORT	View image in PDF format
03/02/1999 -- ANNUAL REPORT	View image in PDF format
04/21/1998 -- ANNUAL REPORT	View image in PDF format
04/24/1997 -- ANNUAL REPORT	View image in PDF format
01/27/1997 -- MERGER	View image in PDF format
04/08/1996 -- ANNUAL REPORT	View image in PDF format
05/01/1995 -- ANNUAL REPORT	View image in PDF format

Miami Dade County Building Department
0000451346 12/1/2009 12:04:15 PM
GENERAL01 10162009.pdf
Examiner Date Time Stamp Disp Trade Stamp Name
Stephen Kovach 10/19/2009 4:04:29 PM A ELEC Approved

Note: This is not official record. See documents if question or conflict.

Previous on List **Next on List** **Return To List**

Events

No Name History

Officer/RA Name Search

Submit

Copyright and Privacy Policies
Copyright © 2007 State of Florida, Department of State.

Miami Dade County Building Department
0000451346 - 12/1/2009 12:04:15 PM
GENERAL01-10162009.pdf

Examiner	Date Time Stamp	Disp.	Trade	Stamp Name
Stephen Kovach	10/19/2009 4:04:29 PM	A	ELEC	Approved

MIAMI-DADE COUNTY BUILDING DEPARTMENT

ELECTRICAL FEE SHEET

*Attention applicant: you are responsible for filling out this application correctly. If you have any questions concerning what category your work falls under, please see an inspector or processor for your trade. Refunds will not be given in case of error on your part and you will be charged a double fee plus a $100.00 for doing work without a permit. Minimum fee for electrical permits is $51.50 unless otherwise noted.

Under penalties of perjury, I declare that to the best of my knowledge, the facts stated in this document are true. I understand that perjury is a felony of the third degree.

Signature (L.S.)

Category 01 General Electric

G080	Residential wiring **(Please note the fee will be calculated based on the square footage on the master permit)** (Includes all residential items under Category 01 except common areas of Group H occupancy and service change all groups)	0.08¢ per Sq. Ft. (Minimum Fee $68.70)	# of Sq. Ft.		
G081	Residential wiring alteration or repair including all residential items under category 01 except common areas of Group H occupancy and service changes all groups)	0.046¢ per $1.00 in Value (Minimum Fee $68.70)	Est. Value		
G005	All other wiring/outlets (includes empty conduit system)	$ 1.84 per Outlet 10 LIGHT FIXTURES	# of Outlets 400 WATT	~~XXD~~	18.40
G008	AC/refrigeration system elec. work	$ 6.87 per Ton	# of Tons		
G009	Fixture	$ 1.84 per Fixture	# of Fixtures		
G010	Plugmold Track Lighting	$ 3.56 per 5 Feet	# of Ln. Ft.		
G012	Generator/Transformer/Strip heater KW	$ 8.02 per ea. 10 KW	# of KW		
G025	Single station residential smoke detector (does not include outlet)	$ 1.37 per Detector	# of Detectors		
G033	Electrical Feeders	$ 13.74 per Feeder	# of Feeders		
G034	Permanent Service to Buildings (Need master permit number)	$ 5.16 per 100 Amps	# of Amps		
G067	Repair or upgrade of existing service (If commercial and no building permit must be processed)	$ 5.16 per 100 Amps	# of Amps		
G082	Special outlets	$ 8.02 per Outlet	# of Outlets		
G041	Commercial equipment	$ 8.02 per 10 KW	# of KW		
G045	Electrical equipment (switchboard control board)	$ 22.90 per Board	# of Boards		
G083	Motors install repair or replace	$ 10.31 each Motor	# of Motors		
G076	Conduit ductbank	$ 2.07 per Ln. ft.	# of Ln. ft.		
G075	Time Clock	$ 8.02 per Time Clock	# of Time Clocks		
G077	Underground Manhole	$114.49 per Manhole	# of Manholes		
G073	Screen bonding ground	$ 68.70 per Installation	# of Installations		
G079	Safety check for reconnection	$ 5.16 per 100 Amp	# of Amps		
G115	Fixture retrofit	$ 51.50 per jobs	# of Jobs		
G122	Demolition	$ 51.50 per structure	# of Structures		

Miami Dade County Building Department
0000451046 10/4/2009 12:04:15 PM
GENERAL01-10163000.pdf
Examiner Date Time Stamp Disp Trade Stamp Name
Stephen Kovach 10/19/2009 4:04:29 PM A ELEC Approved

Category 02 Burglar Security Systems

Groups H and I

G089	Installation Wiring	$ 51.53 per System	# of Jobs		
G090	Installation Devices	$ 51.53 per System	# of Jobs		
G105	Complete System	$103.05 per System	# of Systems		
G091	Repair to System	$ 51.53 per System	# of Systems		

All Other Groups

G104	Installation Wiring	$ 51.53 per System	# of Jobs		
G103	Installation of Devices	$ 51.53 per System	# of Jobs		
G106	Complete System	$103.05 per System	# of Systems		
G107	Repair to System	$ 51.53 per System	# of Systems		

Fee Code	Description	Fee Calculations	Units	# of Units	Fee
Category 04	**Fire Alarm (needs processing)**				
G087	New systems and upgrades	$143.12 per system	# of Systems	_____	_____
G088	Repair and additions to existing system	$ 68.70	# of Systems	_____	_____
Category 06	**Master T.V. Antenna**				
G020	Master T.V.	$ 22.90 Control	# of Controls	_____	_____
G025	Devices	$ 1.37 per Device	# of Devices	_____	_____
G069	Repair to existing system	$ 1.37 per Device	# of Devices	_____	_____
G113	Cable T.V.	$ 51.50 per System	# of Systems	_____	_____
G114	Satellite Dishes	$ 51.50 per System	# of Systems	_____	_____
Category 06 and 35	**Combination Master T.V. Antenna/Telephone Communicators**				
G121	Antenna & Communication	$ 51.50 per System	# of Systems	_____	_____
Category 07	**Sound & Intercom**				
G092	New System (Group I)	$ 68.70 per System	# of Systems	_____	_____
G093	New System (Other Groups)	$103.05 per System	# of Systems	_____	_____
G094	Repair System	$ 68.70 per System	# of Systems	_____	_____
Category 08	**Utility Electrical (needs processing)**				
Note: for replacement of power supplies in County rightway easement					
G099	Electrical Service	$103.05 per Service	# of Services	_____	_____
Category 14	**Temporary Service for Construction (Must list master Bldg. permit #) (Must have separate application)**				
G002	Temp for Construction	$ 57.25 per Service	# of Services	_____	_____
G078	Temp service for asbestos removal	$ 57.25 per Service	# of Services	_____	_____
Category 15	**Temporary for Test (ELEVATORS) (Good for 180 days two affidavits required. One affidavit to be kept at job site, other delivered to inspector's office) (Must have separate application)**				
G038	Temp for Test (elevator)	$103.05 per Elevator	# of Elevators	_____	_____
Category 16	**Specialty Wiring (includes circus, carnival, fair and Christmas tree lots) (Must be processed if no building permit.)**				
G086	Per ride or structure with electrical wiring	$ 57.25 per Ride or Structure	# of Rides or Structures	_____	_____
Category 18	**Energy Service Management**				
G095	Per Floor	$120.22 per Floor	# of Floors	_____	_____
G096	Repair per Floor	$ 68.70 per Floor	# of Floors	_____	_____
Category 21	**Agricultural Services (Must be processed by Zoning prior to Electrical review)**				
G035	Agricultural Service (permanent) Includes pump and related equipment	$ 57.25 per Service	# of Services	_____	_____
Category 22	**Trailer Service (Must be processed if no building category 86)**				
G036	Trailer Service (construction)	$137.39 per Service	# of Services	_____	_____
G037	Trailer Service (residential)	$ 68.70 per Service	# of Services	_____	_____
G008	A/C System Electrical work	$ 6.87 per ton	# of Tons	_____	_____
Category 23	**Swimming Pools (Must be tied to building permit except for repairs of electrical only)**				
G026	Pool or Spa (Residential)	$ 68.70 per Pool or Spa	# of Pools or Spas	_____	_____
G027	Pool or Spa (Commercial)	$160.29 per Pool or Spa	# of Pools or Spas	_____	_____
G056	Pool/Spa (Residential)	$103.05 per Pool or Spa	# of Pools or Spas	_____	_____
G059	Pool or Spa (Commercial	$217.54 per Pool or Spa	# of Pools or Spas	_____	_____
G097	Repair Residential Pool	$ 68.70 per Pool or Spa	# of Pools	_____	_____
G098	Repair Commercial Pool	$160.29 per Pool or Spa	# of Pools	_____	_____
Category 24	**Free Standing Service (new meter where no building permit must be processed) Includes parking lot lighting poles, lawn sprinkler pump, etc.**				
G099	Free Standing Service	$103.05 per Service	# of Services	_____	_____

Miami Dade County Building Department
00004526 - 12/10/2009 4:04:29 PM
GENERAL01-10162009.pdf
Examiner Date Time Stamp Disp. Trade Stamp Name
Stephen Kovach 10/19/2009 4:04:29 PM A ELEC Approved

10

Fee Code	Description	Fee Calculations	Units	# of Units	Fee
Category 26	**Temp Service Test (good for 30 days) Two affidavits are required. One affidavit to be kept at job site, one to be delivered to inspector's office (Separate application)**				
G031	Temp for Test (Commercial)	$103.05 per Service	# of Services	_____	_____
Category 27	**Interior Sign Architectural Feature (Must be processed) Inside structure only.**				
G051	Linear Neon Strips	$ 2.29 per 5 ft.	# of Sq. Ft.	_____	_____
G013	Sq. Ft. of Sign	$ 1.13 per Sq. Ft. (Minimum Fee $76.71)	# of Sq. Ft.	_____	_____
G014	Repairs, reconnection	$ 67.55 each	$ of Repairs	_____	_____
Category 28	**Lighting Pole (Parking lot lighting from poles) (Must be processed on separate application if no building permit; this will result in building fees being assessed by the plans examiner.)**				
G084	Light Pole Standard (Group I)	$ 11.45 per Pole	# of Poles	10	114.50
G085	Light Pole Standard (Commercial)	$ 17.18 per Pole	# of Poles	_____	_____
Category 29	**Recreational Vehicle (temporary service for hurricane or emergency use only) (Must be processed by Zoning)**				
G037	Trailer Service (Residential)	$ 68.70 per Service	# of Services	_____	_____
Category 31	**Change out of exact replacement of A/C. (This category is for Electrical Contractors and State Mechanical licensee's only)**				
G043	Replace/relocate existing A/C Refrigeration Units by Tons	$ 2.29 per Ton	# of Tons	_____	_____
G044	Replace/relocate existing A/C Refrigeration Units by KW	$ 2.29 per KW	# of KW	_____	_____
Category 32	**Data Communication Cables**				
G110	Data Communication Cables	$ 51.50 per System	# of Systems	_____	_____
Category 33	**Central Vacuum**				
G109	Central Vacuum	$ 51.50 per System	# of Systems	_____	_____
Category 34	**Solar Photovoltaic (Must be processed if no building permit)**				
G111	Solar Photovoltaic	$ 51.50 per System	# of Systems	_____	_____
Category 35	**Telephone & Communication**				
G108	Telephone & Communication	$ 51.50 per System	# of Systems	_____	_____
Category 36	**Smart House System (Must be processed if no building permit)**				
G112	Smart House System	$ 51.50 per System	# of Systems	_____	_____
Category 38	**Generators (Standalone) (To be used when there is no building permit and must be processed)**				
G012	Generator	$ 8.02 per ea. 10KW	# of KW	_____	_____

Miami Dade County Building Department
0000451346 - 12/1/2009 12:04:15 PM
GENERAL01-10162009.pdf

Examiner	Date Time Stamp	Disp.	Trade	Stamp Name
Stephen Kovach	10/19/2009 4:04:29 PM	A	ELEC	Approved

7

DAVIS ENGINEERS

780 TAMIAMI CANAL ROAD – MIAMI, FLORIDA 33144
PHONE: 305-266-2566 FAX: 305-267-1556 E-mail: projects@davisengrs.com

O.L.#:127365
E.B.#: 0001809

PROJECT: Lakes Of The Meadow
4450 SW 152 Avenue
Miami, FL 33185
FOLIO #5921655738

CLIENT: R.L.S. Lighting, Inc.

DE No.: 2K9RL09

Structural Calculations

Description: Foundation Design For Light Pole

DATE: September 21, 2009

No. of Pages: Cover + 3

21 Sep 2009

Miami Dade County Building Department
0000[illegible]1346 [illegible] 12:04:15 PM
GENERAL01-10162009.pdf

Examiner	Date Time Stamp	Disp.	Trade	Stamp Name
Stephen Kovach	10/19/2009 4:04:29 PM	A	ELEC	Approved

Harold R. Cobb, P.E.
Structural Engineer
FL. No.: 10993

DAVIS ENGINEERS

780 TAMIAMI CANAL ROAD – MIAMI, FLORIDA 33144
PHONE: 305-267-2566 FAX: 305-267-1556 E-mail: projects@davisengrs.com

O.L.#:127365
E.B.#: 0001809

Codes:	Materials:
(1) FBC – 2007 (2) ASCE 7-02	(1) Concrete: 3,000 psi compressive strength in 28 days (2) Steel: ASTM A 615, Grade 60

Table of Content:

Page	Description
1	Single RLS–DA-400MH-IV
Notes:	If you have any questions, please call us at 305-266-2566.

Miami Dade County Building Department
0000451346 - 12/1/2009 12:04:15 PM
GENERAL01-10162009.pdf

Examiner	Date Time Stamp	Disp.	Trade	Stamp Name
Stephen Kovach	10/19/2009 4:04:29 PM	A	ELEC	Approved

21 Oct 2009

Davis Engineers
Miami Florida, 33144
PH: 305-266-2566 FX: 305-267-1556

Project: Lakes of the Meadow
Job No. : 2K9RL09

Light Pole Foundation Design:

1 -Post Geometry:

			1
h	Post Height	[redacted]	ft
dtop	Post Diam (Top.)	[redacted]	in
dbot	Post Diam (Bot.)	[redacted]	in
D	Aveg. Post Diameter	7.32	in
D'	Depth of protruding elem	[redacted]	in
D'/D	Roughness Ratio	0	
tw	Post Thickness	[redacted]	in
	Arm Radius (in)	[redacted]	in
	Arm Diam (Top)	[redacted]	in
	Arm Diam (Bot.)	[redacted]	in
	Lamp Length	[redacted]	in
	Lamp Height	[redacted]	in
	Lamp Width (1)	[redacted]	in
	Lamp Type	[redacted]	
	Base Diam.	0	in
	Base Height:	0	ft
habove	Above Ground	0	ft
	Below Ground	0	ft

<--- Neglect if Base Height is 0 ft.

Materials:

Post	[redacted]		
Post	Fy	55,000	psi
	Fb	36,300	psi
	fc	3,000	psi
Conc Base:	Fy	60,000	psi
	fc	3,000	psi
Soil	qa (sand)	2,500	psf
	qa (rock)	2,500	psf

Single RLS-DA-400MH-IV

Lamp Projected Area:

Side =	264	in ^2
Front =	176	in^2
Total =	1.83	ft^2

Harold R. Cobb, P.E.
Structural Engineer
PE#: 10993

2- Wind Load Calculation Data:

V	Basic wind speed:	[redacted]	mph
	Exposure category:	[redacted]	
	Building Category:	I	
I	Importance Factor	[redacted]	
	Hurricane prone Region:	[redacted]	
Kd	Directionality Factor	[redacted]	
Kzt	Topographic Factor	[redacted]	

Lakes of the Meadows, Miami-Dade County, FL	
ASCE-7/02 Velocity pressure coeff.	
alpha =	9.5
zg =	900 ft
G =	0.85

	Mark	Elev (ft)	Diam (in)	Area (ft^2)	Kz --	q(z) (psf)	h/D --	Cf --	F (lb)	Mot (lb-ft)
12	h Lamp	25.00	11.0	1.83	0.95	39.8	51.1	2.00	124.13	3,103
11	h Arm	24.50	4.0	0.52	0.94	39.7	51.1	1.20	21.18	519
10	h_pole_10	24.00	5.6	1.16	0.94	39.5	51.1	0.70	27.29	655
9	h_pole_9	21.60	6.0	1.23	0.92	38.6	48.2	0.70	28.24	610
8	h_pole_8	19.20	6.3	1.30	0.89	37.7	45.6	0.70	29.05	558
7	h_pole_7	16.80	6.6	1.36	0.87	36.6	43.3	0.70	29.71	499
6	h_pole_6	14.40	7.0	1.43	0.85	35.8	41.2	0.70	30.44	438
5	h_pole_5	12.00	7.3	1.50	0.85	35.8	39.3	0.70	31.87	382
4	h_pole_4	9.60	7.7	1.56	0.85	35.8	37.6	0.70	33.30	320
3	h_pole_3	7.20	8.0	1.63	0.85	35.8	36.0	0.70	34.73	250
2	h_pole_2	4.80	8.3	1.70	0.85	35.8	34.6	0.70	36.16	174
1	h_pole_1	2.40	8.7	1.77	0.85	35.8	33.2	0.70	37.59	90
b	h_base	0.00	9.0							
Base	h_Ground	0.00								
								Total	464	7598

Miami Dade County Building Department
0000451346 10/19/2009 12:04:05 PM
GENERAL01-10162009.pdf
Examiner Date Time Stamp Disp Trade Stamp Name
Stephen Kovach 10/19/2009 4:04:29 PM A ELEC Approved

Davis Engineers
Miami Florida, 33144
PH: 305-266-2566 FX: 305-267-1556

3 - Post Design Check

Project: Lakes of the Meadow
Job No. : 2K9RL09

Sx at Post Base =	7.33412 in^3	**Round Pole at Base**	
Allowable Stress Increase =	[redacted]		
fb = Moment at Base / (Sx at Post Base)		12,432.5 psi	Steel (55 ksi)
Fb = Allowable Bending Stress x 1		36,300.0 psi	**OK**

4 - Foundation Design Check

Lamp height (ft) = 25.00 ft
P = Equivalent Lateral Load = 304 lbs = (Moment at Base / Lamp Height)
b = diameter of concrete base
d = depth of embedment
(Eq-1) d = (A/2) (1 + (1+(4.36h/A))^0.5)
(Eq-2) A = (2.34 P) / (S1 x b)
(Eq-3) So = 100 psf for Clay, Sandy Clay, Silty Clay.
S1 = So x d /3

Soil Type: **Sand**

Diam b (ft)	Depth d (ft)	S1	A	Eq-1 (ft)	CHK = Diam - D from Eq-1) (OK if > 0)
2.0	[redacted]	383	0.928	5.51	0.24
2.5	5.50	367	0.776	5.00	0.50
3.0	5.25	350	0.677	4.65	0.60
3.5	5.00	333	0.610	4.39	0.61
4.0	4.75	317	0.561	4.20	0.55
4.5	4.50	300	0.527	4.06	0.44
5.0	4.25	283	0.502	3.96	0.29

21 Sept 2009

Harold R. Cobb, P.E.
Structural Engineer
PE#: 10993

Notes:
1) Wind Pressures as per ASCE-7/02.
2) Lamp Width only required when 3 or more lamps are used. Disregard Otherwise
3) Foundation design reference: Timber Constrtuction Manual Eq-5.96
4) Integrity of Lamp assembly by Lamp manufacturer.

Miami Dade County Building Department
0000451346 - 12/1/2009 12:04:15 PM
GENERAL01-10162009.pdf

Examiner	Date Time Stamp	Disp.	Trade	Stamp Name
Stephen Kovach	10/19/2009 4:04:29 PM	A	ELEC	Approved

STRUCTURAL SUPPORT FOR SINGLE RLS-DA-400MH-IV LUMINAIRE

EACH LUMINAIRE: 1.42 EPA/34 LBS.
90° SINGLE BRACKET: .33 EPA/9 LBS.
TOTAL EPA: 1.75/ TOTAL WEIGHT: 43 LBS.

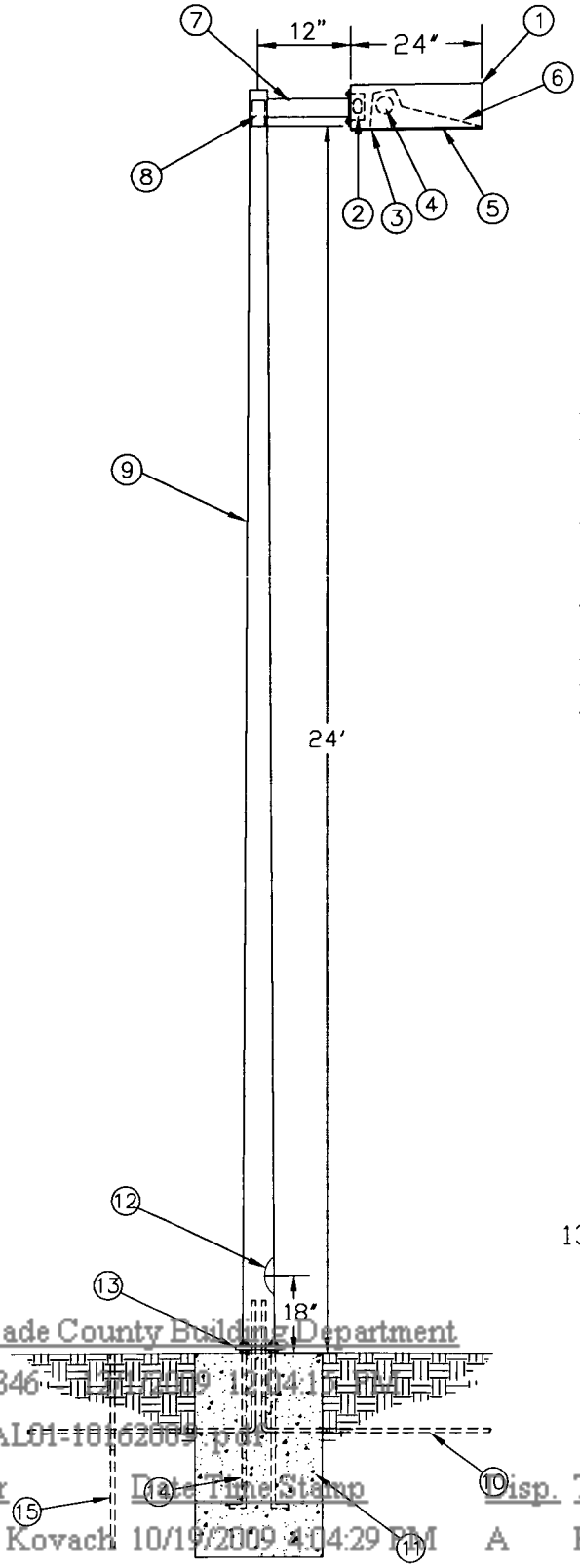

ANCHOR BASE

SPECIFICATIONS

1. EXTRUDED ALUMINUM HOUSING (24" x 16" x 11").
2. 400 H.P.F. CWA BALLAST W/CAPACITOR ATTACHED TO HOUSING.
3. EXTRUDED ALUMINUM DOOR FRAME.
4. 400 WATT METAL HALIDE LAMP.
5. CLEAR-TEMPERED, IMPACT RESISTANT GLASS.
6. DIE-FORMED SPECULAR ALUMINUM REFLECTOR.
7. 50 K.S.I. DAVIT ARM.
8. TENON, SLIP-FIT MOUNT (3-1/2" x 6").
9. 24' ROUND TAPERED STEEL POLE (55 K.S.I./.1196"/11 GA.). (5.64" TOP O.D./9.0" BOTTOM O.D.).
10. CONDUIT, SUPPLIED BY OTHERS.

11a. CONCRETE FOUNDATIONS, BASED ON LOCAL CODES AND SOIL CONDITIONS 2'-0" x 5'-9" W/ 7 #7 VERT. & 5 #3 TIES @ 10" O.C. MAX., f'c = 3,000 PSI)

11b. IF PRECAST FOUNDATIONS ARE USED, PLEASE REFER TO COMPACTION NOTE.
PLEASE NOTE: LIFT POINTS BY FABRICATORS.

12. ELECTRICAL ACCESS HANDHOLE W/WP COVER AS PER (N.E.C. 410-15).
13. BASE PLATE (SEE DETAIL).
14. ANCHOR BOLTS (4 REQUIRED 1"ø Nom. x 36" x 4").
15. GROUND ROD 5/8" x 10' COPPER CLAD

NOTES

1. LUMINAIRE, POLE AND HARDWARE ARE DESIGNED TO WITHSTAND WINDLOADS AS PER FLORIDA BUILDING CODE 2007 /ASCE7-02.
2. FUSE EACH POLE AT ELECTRICAL HANDHOLE WITH BUSSMAN INLINE FUSE HOLDER OR EQUAL

BASEPLATE

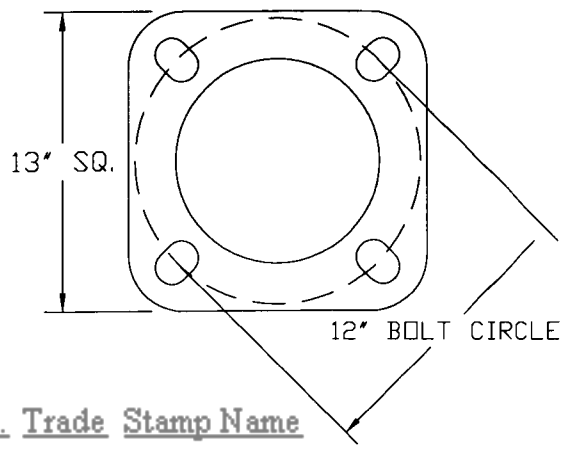

P:\Projects\2K9PROJECTS\2K9RL-PROJECTS\2K9RL09\2K9RL09-SR-PL219_Lake of the Meadows.dwg, 9/21/2009 11:16:57 AM

Miami Dade County Building Department
0000451346 10/19/2009 1:04:15 PM
GENERAL01-10162009.pdf

Examiner	Date Time Stamp	Disp.	Trade	Stamp Name
Stephen Kovach	10/19/2009 4:04:29 PM	A	ELEC	Approved