LEGEND

- INC. FIXTURE W/ A19 - 150W REFLECTOR
- INC. FIXTURE W/ FAN
- EXIST. INCANDESCENT FIXTURE
- EXIST. INCANDESCENT FIXTURE W/ FAN
- INCANDESCENT FIXTURE WALL MOUNTED
- EXIST. INCANDESCENT FIXTURE WALL MOUNTED
- EXHAUST FAN
- PRE WIRED TELEPHONE OUTLET
- EXIST. PRE WIRED TELEPHONE OUTLET
- RECEPTACLE DUPLEX, 15A - 125V.
- EXIST. RECEPTACLE DUPLEX
- EXISTING RECEPTACLE 120/240 V
- SD SMOKE DETECTOR
- $ TOGGLE SWITCH, SINGLE POLE
- $ EXIST. TOGGLE SWITCH, SINGLE POLE
- EXIST. ELECTRICAL PANEL - SEE SCHEDULE

HOMERUN TO PANEL - BOARD
LETTER AND NUMBER INDICATE PANEL AND CIRCUIT (INCL. GROUND AS PER NEC)
HATCH INDICATES No. OF WIRES,
G - INDICATES GROUND

ELECTRICAL NOTES

1. DO NOT SCALE DRAWINGS. REFER TO ARCHITECTURAL PLANS AND ELEVATIONS FOR EXACT LOCATIONS OF ALL EQUIPMENT AND CONFIRM WITH OWNER REPRESENTATIVE.
2. ALL WORK SHALL BE DONE IN ACCORDANCE WITH THE N.E.C. AND SHALL COMPLY WITH ALL LOCAL RULES AND ORDINANCES.
3. UNLESS OTHERWISE NOTES, MINIMUM WIRE SIZE SHALL BE NO. 12 AWG, AND ALL CONDUCTORS SHALL BE COOPER WITH TW INSULATION FOR SIZES NO. 6 AND SMALLER. CONDUCTORS LARGER THAN NO. 6 SHALL HAVE TYPE THW INSULATION. ALL CONDUCTORS NO. 10 AND SMALLER MAY BE SOLID. ALL THOSE NO. 8 AND LARGER SHALL BE STRANDED. EQUIVALENT ALUMINUM CONDUCTORS CAN BE USED SUB FEEDERS NO. 6 OR LARGER, IF APPROVED BY LOCAL REGULATIONS. CONTRACTORS TO VERIFY.
4. ALL RACEWAYS AND PIPES PLACED IN OR THRU ANY CONCRETE SLAB SHALL BE SPACED A MINIMUM OF 3 DIAMETERS OF THE LARGEST CONDUIT OR PIPE OF ANY OTHER SERVICE.
5. ALL RACEWAYS UNDERGROUND AND/OR LARGER THAN 2 INCHES IN DIAMETER SHALL BE GALVANIZED RIGID STEEL. PVC PIPE SCH. 40 WILL BE ACCEPTABLE, IF APPROVED BY LOCAL REGULATIONS. CONTRACTOR TO VERIFY.
6. OUTLET BOXES SHALL BE PRESSED STEEL IN DRY LOCATIONS AND CAST ALLOY WITH THREADED HUBS IN WET OR DAMP LOCATIONS.
7. DISCONNECT SWITCHES SHALL BE QUICK MAKE, QUICK BREAK, IN NEMA 1 OR 3R ENCLOSURE, AS REQUIRED BY EXPOSURE.
8. ALL MATERIAL SHALL BE NEW AND SHALL BEAR UNDERWRITERS AND UNION LABELS WHERE APPLICABLE.
9. ALL WORK SHALL BE PERFORMED BY A LICENSED ELECTRICAL CONTRACTOR IN A WORKMAN LIKE MANNER. THE COMPLETED SYSTEM SHALL BE FULLY OPERATIVE AND ACCEPTANCE BY ENG./ARCH. MUST BE A CONDITION OF THE CONTRACT. ELECTRICIAN SHALL INDICATE ON ELECTRICAL PANEL BOARD AREAS SERVED BY EACH C.B.
10. ALL WORK SHALL BE COORDINATED WITH OTHER TRADES TO AVOID INTERFERENCE WITH PROGRESS OF CONSTRUCTION.
11. CONTRACTOR SHALL GUARANTEE ALL MATERIALS AND WORKMANSHIP FREE OF DEFECT FOR A PERIOD OF NO LESS THAN ONE YEAR FROM THE DATE OF ACCEPTANCE.

ELECTRICAL FLOOD CRITERIA

1. ELECTRICAL OUTLETS (RECEPTACLES AND LIGHTING) BELOW BASE FLOOD ELEVATION SHALL BE INSTALLED AT THE HIGHEST PERMITTED ELEVATION AND SHALL BE INSTALLED WITH SEPARATE INDEPENDENT CIRCUITS FROM THOSE IN THE HABITABLE AREAS.
2. NO APPLIANCE OR APPLIANCE OUTLETS SHALL BE INSTALLED BELOW BASE FLOOD ELEVATION.
3. A/C COMPRESSORS SHALL BE INSTALLED ABOVE BASE FLOOD ELEVATION.
4. MAIN CIRCUIT BREAKER PANELS SHALL BE LOCATED ABOVE BASE FLOOD ELEVATION
5. COORDINATE WITH FLORIDA POWER & LIGHT COMPANY TO LOCATE THE ELECTRICAL METER TO COMPLY WITH FEDERAL EMERGENCY MANAGEMENT AGENCY REQUIREMENTS.

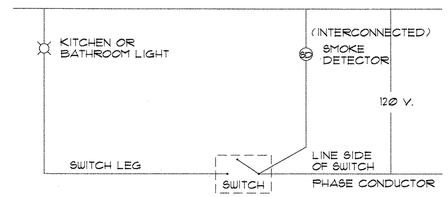

SMOKE DETECTOR CONNECTION DETAIL

N.T.S.

SMOKE DETECTORS SHALL BE HARD WIRED (110 VOLT TYPE) TO A NON-SWITCHABLE KITCHEN OR BATHROOM LIGHTING CIRCUIT, WITH BATTERY BACK UP AND SHALL NOT BE CONNECTED ONTO THE LOAD SIDE OF A GROUND FAULT CIRCUIT INTERRUPTER

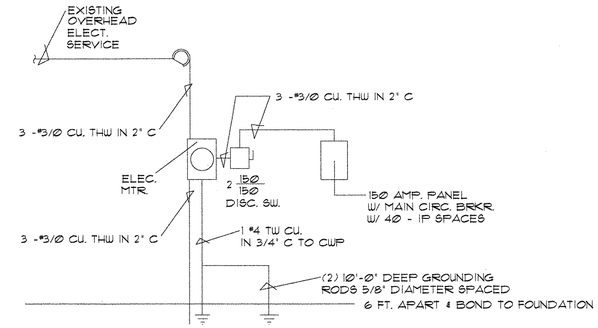

EXISTING ELECTRICAL RISER DIAGRAM

N.T.S.

SQUARE D OR APP. EQ.
240 / 120V 1Φ 3W

PANEL

150 AMPS

CKT. NO.	SERVING	WIRE	CONDUIT	TOT. KVA	POLES	AMPS	CKT. NO.	SERVING	WIRE	CONDUIT	TOT. KVA	POLES	AMPS
1	REFRIGERATOR	12	1/2	1.5	1	20	2	BEDROOM #1	12	1/2	1.5	1	20
3	KITCHEN	12	1/2	1.5	1	20	4	BEDROOM #2	12	1/2	1.5	1	20
5	SMALL APPL.	12	1/2	1.5	1	20	6	LIGHTING	12	1/2	0.6	1	15
7	RANGE	6	1	10	2	50	8	LIGHTING	12	1/2	0.6	1	15
9							10	LIVING RM.	12	1/2	1.5	1	20
11	WATER HEATER	10	1/2	4.5	2	25	12	BATHROOM #1	12	1/2	1.5	1	20
13							14	DINING ROOM	12	1/2	1.5	1	20
15	DRYER	10	3/4	5.0	2	40	16	UTILITY	12	1/2	1.5	1	20
17							18	GFI	12	1/2	1.5	1	20
19	WASHER	12	1/2	1.5	1	20	20	MASTER BED	12	1/2	1.5	1	20
21	GARAGE	12	1/2	1.5	1	20	22	BATH #2	12	1/2	1.5	1	20
23	CU	6	1	3.4	2	30	24	AHU	8	3/4	5.0	2	30
25							26						
27	**LIGHTS**	**12**	**1/2**	**0.6**	**1**	**15**	**28**	**DEN**	**12**	**1/2**	**1.5**	**1**	**20**
29	**DEN**	**12**	**1/2**	**1.5**	**1**	**20**	**30**	**GFI**	**12**	**1/2**	**1.5**	**1**	**20**
31	SPACE						32	SPACE					
33	SPACE						34	SPACE					
35	SPACE						36	SPACE					
37	SPACE						38	SPACE					
39	SPACE						40	SPACE					

EXISTING

NOTE : ROMEX MAY BE USED IN LIEU OF CONDUIT

ARC - FAULT CIRCUIT INTERRUPTOR
REQUIRED IN ALL BEDROOM CIRCUITS & SMOKE DETECTORS

ELECTRICAL LOAD CALCULATIONS

LIGHTS & RECEPTACLES (3W X 2,406 S.F.)	7,218	WATTS
SMALL APPLIANCES	3,000	WATTS
REFRIGERATOR	1,500	WATTS
DISH WASHER	1,200	WATTS
RANGE & OVEN	12,000	WATTS
WATER HEATER	4,500	WATTS
WASHER	1,500	WATTS
DRYER	5,000	WATTS
SUBTOTAL =	35,918	WATTS
FIRST 10,000 W. @ 100%	10,000	WATTS
REMAINING 25,918 W @ 40%	10,367	WATTS
A/C LOAD	5,000	WATTS
TOTAL =	25,367	WATTS

DEMAND LOAD = 25,367 WATTS % 240 V = 106 AMPS

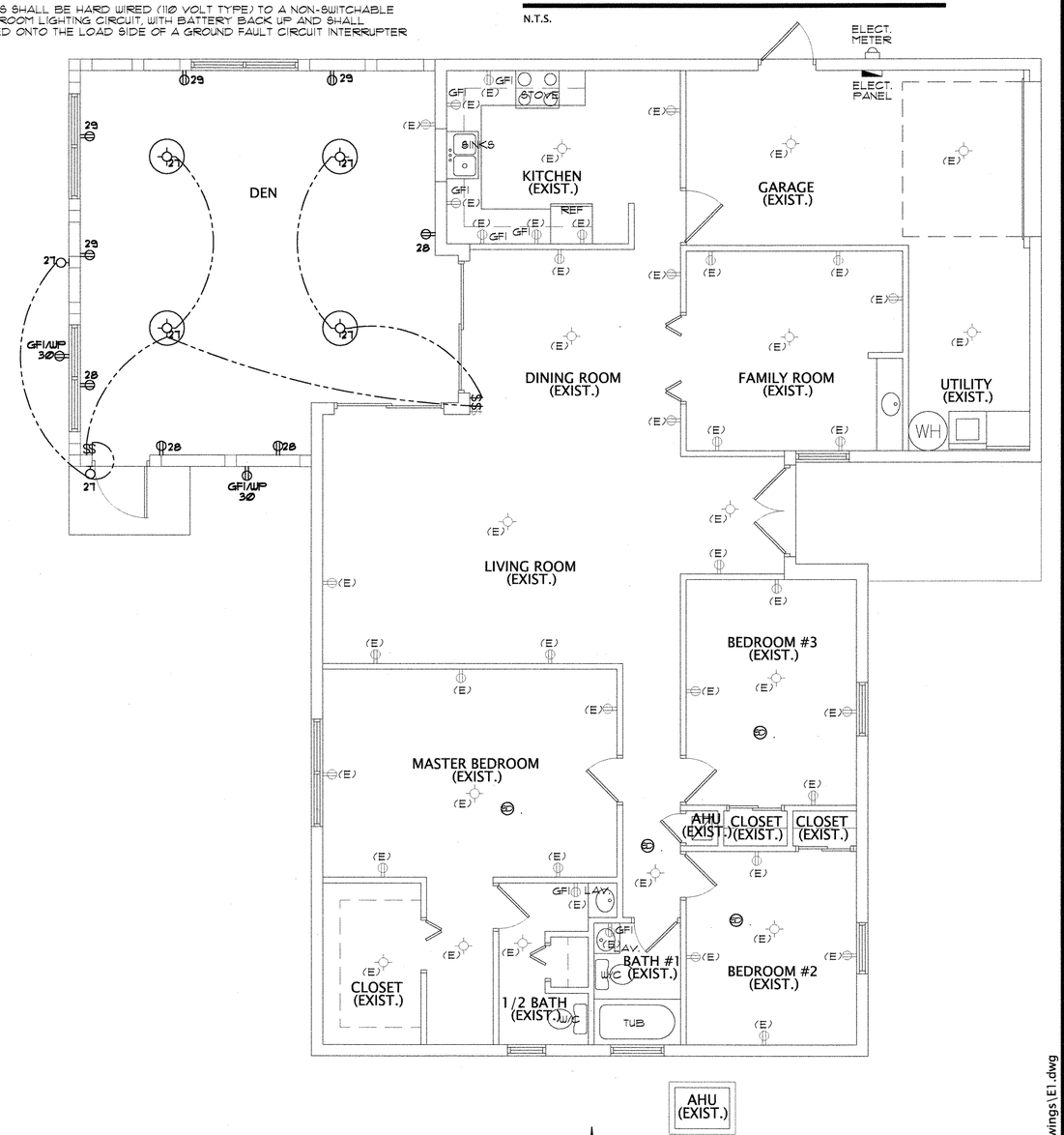

NORTH

ELECTRICAL PLAN

SCALE : 1/4" = 1'-0"

\drawings\E1.dwg

REVISIONS	BY

IN MY PROFESSIONAL JUDGEMENT AND TO THE BEST OF MY KNOWLEDGE AND BELIEF, THESE PLANS AND SPECIFICATIONS COMPLY WITH THE FLORIDA BUILDING CODE AND ALL APPLICABLE CODES.

Charles C. Mitchell, P. E.
Consulting Engineer # 11127
305.945.0202 / 305.628.0140
924 NORTH FEDERAL HIGHWAY
HOLLYWOOD, FLORIDA 33022

Roscoe C. Bradley
Addition to Existing Residence
25926 SW 132nd Court
Naranja, Florida 33032

DRAWN G.C.
CHECKED C. M.
DATE 10-22-2008
SCALE AS SHOWN
JOB NO. 23-2008
SHEET E-1