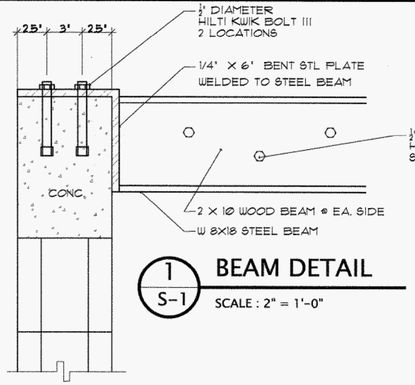

1 S-1 **BEAM DETAIL**

SCALE : 2" = 1'-0"

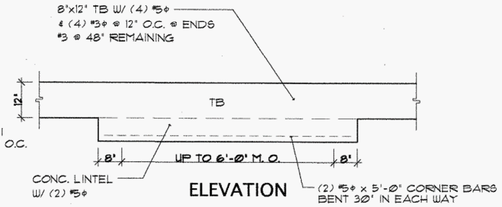

ELEVATION

CONC. LINTEL

SCALE : 1/2" = 1'-0"

ROOF LOADS

AS PER ASCE 7-02
146 MPH, CAT 2., EXP. C, GCpi +0.18

LIVE LOADS = 30 P.S.F.

DEAD LOADS = 15 P.S.F.

GENERAL NOTES

1. DO NOT SCALE DRAWINGS, USE FIGURED DIMENSIONS ONLY. CONTRACTOR SHALL VERIFY ALL DIMENSIONS AND CONDITIONS, IN EVENT OF CONFLICT NOTIFY ARCHITECT BEFORE PROCEEDING.
2. CONTRACTOR SHALL COORDINATE WITH OWNER AND VARIOUS TRADES SO THAT PROPER OPENINGS AND CHASES SHALL BE PROVIDED.
3. SOIL STATEMENT:
   a. THIS SITE HAS BEEN OBSERVED TO BE SOIL, SAND AND ROCK AND IS CAPABLE OF SUPPORTING A LOAD OF 2,000 P.S.F. THE DESIGN LOAD OF THIS PROJECT DOES NOT EXECEED 2,000 P.S.F.
   b. A LETTER WILL BE SUBMITTED AFTER GROUND HAS BEEN BROKEN, ATTESTING TO THE FACTS THAT THE SITE HAS BEEN OBSERVED AND CONDITIONS ARE SIMILAR TO THOSE UPON WHICH THE DESIGN IS BASED
5. CONCRETE SHALL HAVE A SLUMP OF 5" MAX. AND A MIN. COMPRESSIVE STRENGTH IN 28 DAYS AS FOLLOWS:
   FOUNDATIONS AND SLABS ON GRADE 3000 PSI
   COLUMNS AND BEAMS 3000 PSI
   CONCRETE COVER FOR ALL POURED IN PLACE CONCRETE SHALL BE AS FOLLOWS:
   FOUNDATIONS 3 INCHES
   COLUMNS 1-1/2 INCHES
   SLAB ON FILL W.W.F. AT CENTER OF SLAB
6. GROUT STRENGTH 3000 PSI WITH 9" MAX. SLUMP.
7. REINFORCING STEEL SHALL CONFORM TO THE REQUIREMENTS OF A.S.T.M. A615 SPECIFICATIONS FOR NEW DEFORMED BILLET STEEL AND TO GRADE 60 SPECS. WITH A MIN. YIELD STRENGTH OF 60,000 PSI. IT SHALL BE DETAILED, FABRICATED AND PLACED AS RECOMMENDED BY A.C.I.
8. WELDED WIRE FABRIC (W.W.F.) SHALL CONFORM TO A.S.T.M. A-185, DOUBLE W.W.F. 36" ON EACH SIDE OF BEARING WALLS AND 30" AROUND PERIMETER OF MONOLITHIC FOOTINGS.
9. CONCRETE MASONRY UNITS SHALL BE LOAD BEARING TYPE CONFORMING TO A.S.T.M. C90; MASONRY MORTAR SHALL CONFORM TO ASTM C270, TYPE "M".
10. ALL STRUCTURAL LUMBER SHALL BE #2 SOUTHERN PINE OR BETTER.
11. ALL ROOF JOISTS, TRUSSES, OUTLOOKERS, BEAMS AND GIRDERS SHALL BE SECURED WITH APPROVED METAL TIES, CLIPS, AND ANCHORS TO TIE BEAMS OR BEARING PARTITIONS. PROVIDE PRODUCT CONTROL NOTICE OF ACCEPTANCE.
12. ALL WOOD IN CONTACT WITH CONCRETE OR MASONRY SHALL BE PRESSURE TREATED.

BEAM SCHEDULE

MARK	SIZE	ELEV. TOP	REINFORCING BOT.	REINFORCING TOP	#3 STIRRUPS EA. END	REMARKS
TB	8" X 12"	+9'-0"	(2) #5ϕ	(2) #5ϕ	(4) #3ϕ 12" CORNER/ #3ϕ 48" REMAINING	

FOUNDATION SCHEDULE

MARK	SIZE	REINFORCING L.W.	REINFORCING S.W.	REINFORCING CONT.	REINFORCING TRANSV.	REMARKS
TE-1	12" X 16"	(2) #5 ϕ CONTINUOUS				POUR MONOLITHIC W/ SLAB
TE	8" X 8"	(1) #5 ϕ CONTINUOUS				POUR MONOLITHIC W/ SLAB

COLUMN SCHEDULE

MARK	SIZE	REINFORCING L.W.	REINFORCING S.W.	REINFORCING CONT.	REINFORCING TIES	REMARKS
A	8"W. X 8"L.	-	-	(2) #5 ϕ	#3 @ 8" O.C.	

Detail wood to wood connections provide N.O.A. typical

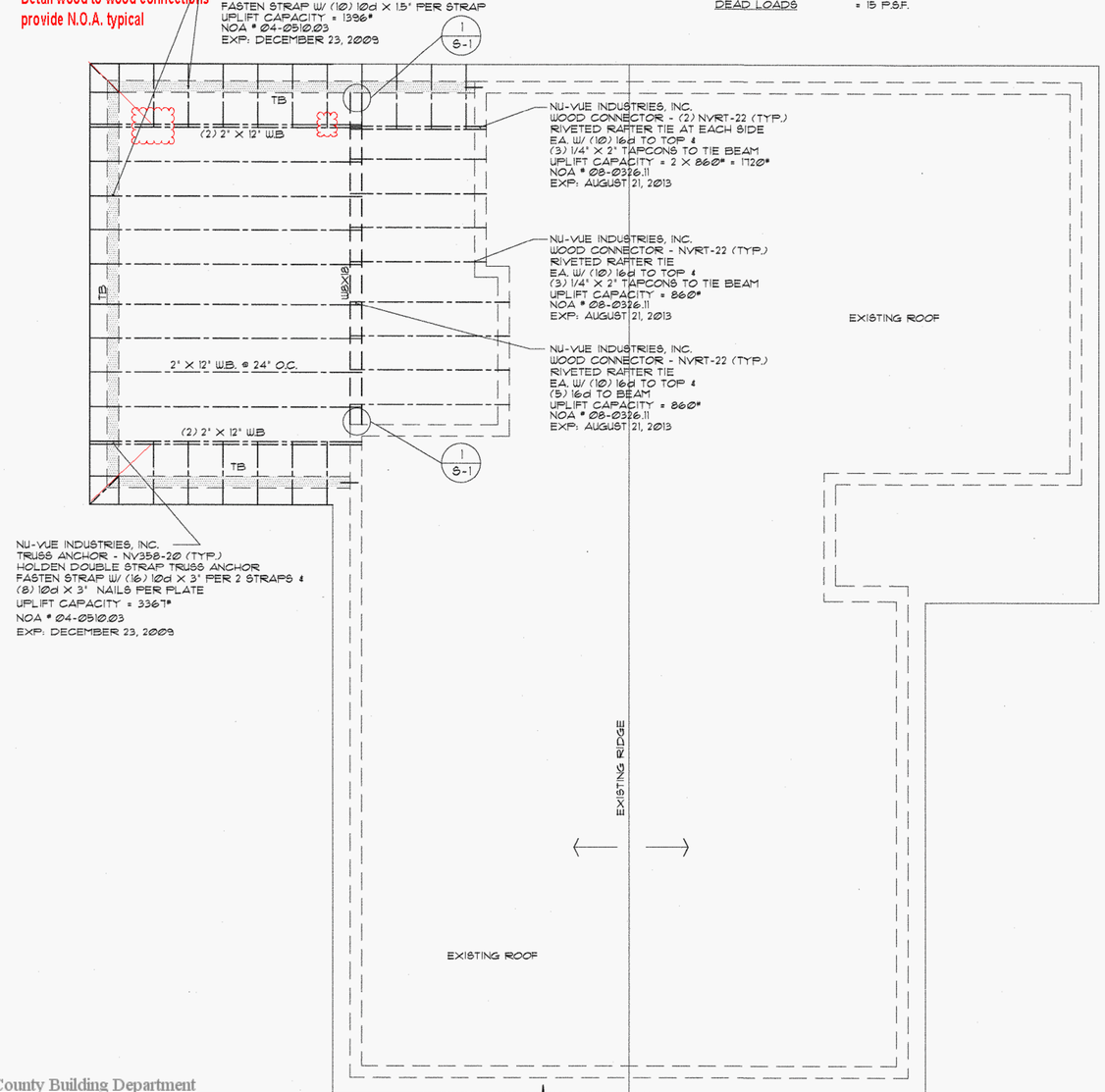

NORTH

ROOF FRAMING PLAN

SCALE : 1/4" = 1'-0"

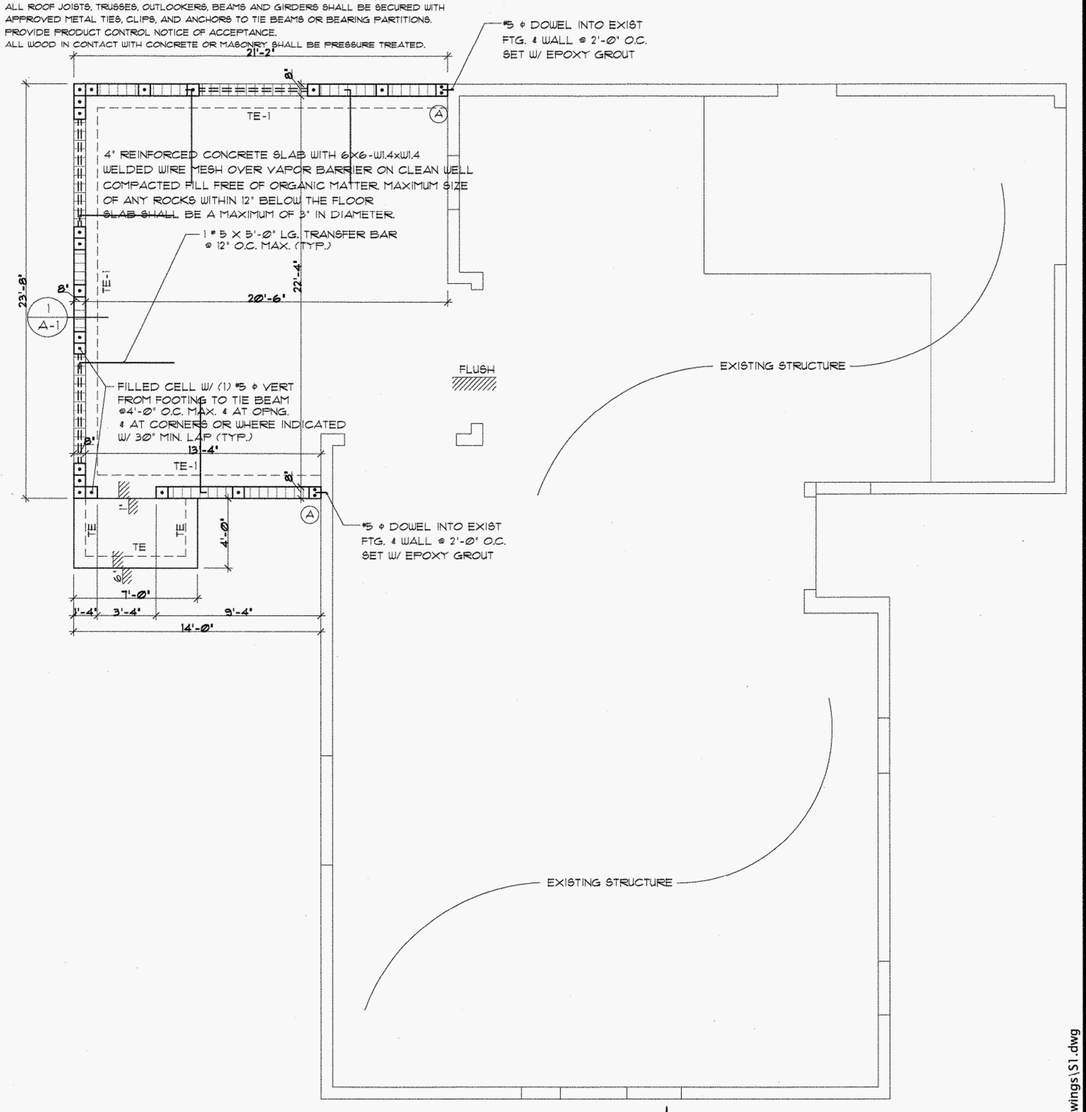

NORTH

FOUNDATION PLAN

SCALE : 1/4" = 1'-0"

\drawings\S1.dwg

REVISIONS	BY

IN MY PROFESSIONAL JUDGEMENT AND TO THE BEST OF MY KNOWLEDGE AND BELIEF, THESE PLANS AND SPECIFICATIONS COMPLY WITH THE FLORIDA BUILDING CODE AND ALL APPLICABLE CODES.

Charles C. Mitchell, P. E.
Consulting Engineer # 11127
305.945.0202 / 305.628.0140
924 NORTH FEDERAL HIGHWAY
HOLLYWOOD, FLORIDA 33022

Roscoe C. Bradley

Addition to Existing Residence

25926 SW 132nd Court
Naranja, Florida 33032

DRAWN G.C.
CHECKED C. M.
DATE 10-22-2008
SCALE AS SHOWN
JOB NO. 23-2008
SHEET S-1

3 OF 4 SHEETS

Miami Dade County Building Department
0000581515 - 11/5/2008 2:21:54 PM
Foundation.pdf

Examiner	Date Time Stamp	Disp.	Trade	Stamp Name
Ana Salgueiro	11/5/2008 2:16:14 PM	V	STRU	Void