MIAMI-DADE COUNTY
BUILDING CODE COMPLIANCE OFFICE (BCCO)
PRODUCT CONTROL DIVISION

MIAMI-DADE COUNTY, FLORIDA
METRO-DADE FLAGLER BUILDING
140 WEST FLAGLER STREET, SUITE 1603
MIAMI, FLORIDA 33130-1563
(305) 375-2901 FAX (305) 375-2908
www.buildingcodeonline.com

NOTICE OF ACCEPTANCE (NOA)

Jeld Wen Inc.
3737 Lakeport Blvd.
Kalamath Falls, OR 97601

SCOPE:
This NOA is being issued under the applicable rules and regulations governing the use of construction materials. The documentation submitted has been reviewed by Miami-Dade County Product Control Division and accepted by the Board of Rules and Appeals (BORA) to be used in Miami Dade County and other areas where allowed by the Authority Having Jurisdiction (AHJ).

This NOA shall not be valid after the expiration date stated below. The Miami-Dade County Product Control Division (In Miami Dade County) and/or the AHJ (in areas other than Miami Dade County) reserve the right to have this product or material tested for quality assurance purposes. If this product or material fails to perform in the accepted manner, the manufacturer will incur the expense of such testing and the AHJ may immediately revoke, modify, or suspend the use of such product or material within their jurisdiction. BORA reserves the right to revoke this acceptance, if it is determined by Miami-Dade County Product Control Division that this product or material fails to meet the requirements of the applicable building code.

This product is approved as described herein, and has been designed to comply with the Florida Building Code, including the High Velocity Hurricane Zone.

DESCRIPTION: Series "6'-8" & 8'-0"" Single Outswing opaque Insulated Steel Doors

APPROVAL DOCUMENT: Drawing No "**DC9970**", titled "6'-8" & 8'-0 Single outswing Opaque Steel Edge", sheets 1 through 5 of 5, dated 12-07-07 and last revised on 02-05-08, prepared by the manufacturer, signed and sealed by Nimesh Bhavsar, P.E., bearing the Miami-Dade County Product Control renewal stamp with the Notice of Acceptance number and expiration date by the Miami-Dade County Product Control Division.

MISSILE IMPACT RATING: Large Missile Impact Resistant
Limitation: 1.Units are not rated where water infiltration is needed, unless complies with exceptions per FBC.

LABELING: Each unit shall bear a permanent label with the manufacturer's name or logo, city, state and following statement: "Miami-Dade County Product Control Approved", unless otherwise noted herein.

RENEWAL of this NOA shall be considered after a renewal application has been filed and there has been no change in the applicable building code negatively affecting the performance of this product.

TERMINATION of this NOA will occur after the expiration date or if there has been a revision or change in the materials, use, and/or manufacture of the product or process. Misuse of this NOA as an endorsement of any product, for sales, advertising or any other purposes shall automatically terminate this NOA. Failure to comply with any section of this NOA shall be cause for termination and removal of NOA.

ADVERTISEMENT: The NOA number preceded by the words Miami-Dade County, Florida, and followed by the expiration date may be displayed in advertising literature. If any portion of the NOA is displayed, then it shall be done in its entirety.

INSPECTION: A copy of this entire NOA shall be provided to the user by the manufacturer or its distributors and shall be available for inspection at the job site at the request of the Building Official.

This NOA **renews** NOA # **02-1211.13** and consists of this page 1 and evidence page, as well as approval document mentioned above.

The submitted documentation was reviewed by **Ishaq I. Chanda, P.E.**

Miami Dade County Building Department
0000581515 11/13/2008 9:36:46 AM
Door Noa 08-0208.07.pdf

Examiner	Date Time Stamp	Disp.	Trade	Stamp Name
Ana Salgueiro	10/28/2008 9:26:43 AM	A	STRU	Approved

MIAMI-DADE COUNTY APPROVED
2/26/18

Jeld Wen Inc.

NOTICE OF ACCEPTANCE: EVIDENCE SUBMITTED

A. DRAWINGS

1. Manufacturer's parts and sections drawings.
2. Drawing No "**DC9970**", titled "6'-8" & 8'-0 Single outswing Opaque Steel Edge", sheets 1 through 5 of 5, dated 12-07-07 and last revised on 02-05-08, prepared by the manufacturer, signed and sealed by Nimesh Bhavsar, P.E.

B. TESTS (Photo copies from files # **02-1211.13**), original test report conducted per SFBC, 201, 202 and 203-94, now termed as FBC, TAS 201, 202 and 203-94.

1. Test report on
   1) Air Infiltration Test, per TAS 202-94
   2) Uniform Static Air Pressure Test, Loading per TAS 202-94
   3) No Water Resistance Test performed.
   4) Large Missile Impact Test per FBC, TAS 201-94
   5) Cyclic Wind Pressure Loading per FBC, TAS 203-94
   6) Forced Entry Test, per PA 202-94

along with marked-up drawings and installation diagram of single outswing and inswing residential insulated steel doors, prepared by Certified Testing Laboratories, Test Report No(s) Test Report No. **CTLA455W**, dated October 11, 1999 and **CTLA650W**, dated January 03, 2001 and, both signed and sealed by Ramesh Patel, P.E.

C. CALCULATIONS:

1. Anchor calculations prepared by O.M. Engineering Services Inc., dated 02-05-08, signed and sealed by Nimesh Bhavsar, P. E.

D. QUALITY ASSURANCE BY;

1. Miami-Dade County Building Code Compliance Office (BCCO).

E. MATERIAL CERTIFICATIONS (Photo copies from files # **02-1211.13**)

1. Tensile Test prepared by Certified Testing Laboratories, Test Report No. **CTLA455W**, dated October 11, 1999, for steel samples, tested per ASTM E8-93a, signed and sealed by signed and sealed by Ramesh Patel, P.E.
2. Test Report No. ITS-J99006660-001, prepared by Intertek Testing Services NA, Inc., issued to Jeld-Wen Research and Development, dated April 8, 1999, for samples of foam, tested per **ASTM E 84-94** "Standard Test Methods for Surface Burning Characteristics of Building Materials" and **ASTM D 1929-91A** "Standard Test Method for Ignition Properties of Plastics"; signed and sealed by Douglas Keith Tucker, P.E.

F. STATEMENTS

1. Letter of conformance & "No financial interest" dated February 01, 2008, signed and sealed by Nimesh Bhavsar, P.E.
2. Laboratory Statement of compliance, part of the test report **CTLA455W** & **CTLA650W**, signed and sealed by Ramesh Patel, P.E.

F. OTHER

1. This NOA **renews** NOA # **02-1211.13**, expiring February 11, 2008.

Miami Dade County Building Department
0000581515 - 11/13/2008 9:56:46 AM
Door Noa 08-0208.07.pdf

Examiner	Date Time Stamp	Disp.	Trade	Stamp Name
Ana Salgueiro	10/28/2008 9:26:43 AM	A	STRU	Approved

Ishaq I. Chanda

Ishaq I Chanda, P.E.
Product Control Examiner
NOA No 08-0208.07
Expiration Date: February 11, 2013
Approval Date: March 20, 2008

JELD-WEN® Steel

6'-8" & 8'-0" SINGLE OUTSWING OPAQUE STEEL EDGE IMPACT STEEL DOOR IN WOOD FRAME

GENERAL NOTES

1. THIS PRODUCT IS DESIGNED TO COMPLY WITH THE FLORIDA 2004 BUILDING CODES (W/2005, 2006 SUPPLEMEMTS) AND "HIGH VELOCITY HURRICANE ZONES" (HVHZ) REQUIREMENTS.
2. WOOD BUCKS BY OTHERS, MUST BE ANCHORED PROPERLY TO TRANSFER LOADS TO THE STRUCTURE.
3. PRODUCT ANCHORS SHALL BE AS LISTED AND SPACED AS SHOWN ON DETAILS. ANCHOR EMBEDMENT TO BASE MATERIAL SHALL BE BEYOND WALL DRESSING OR STUCCO.
4. IMPACT RESISTANT SHUTTERS NOT REQUIRED.
5. DESIGN PRESSURE RATING SHALL BE AS FOLLOWS:
   –FOR 6'8" WOOD FRAMES – SEE TABLE SHEET 1
   –FOR 8'0" WOOD FRAMES – SEE TABLE SHEET 1
6. THIS SYSTEM WAS TESTED FOR 2.86 LBS. WATER PRESSURE AS PER ASTM–E331.
7. THIS PRODUCT DOES NOT MEET THE WATER REQUIREMENTS FOR "HVHZ".

OUTSWING IMPACT STEEL EDGE DOOR

(Common to all frame conditions)

DOOR LEAF CONSTRUCTION:

Face sheets: 24 ga. (0.020") minimum thickness, Galvanized Steel A–525 commercial quality – AKDQ per ASTM 620 with minimum average yield strength Fy=26,240 psi.

Core design: Expanded polystyrene with 1.0 to 1.25 lbs. density, by JELD–WEN.

Panel Construction: Steel face sheets glued to expanded polystyrene (EPS), with steel top and bottom rails and steel stiles with a wood lock block reinforcement. The hinge stile contains a MDF board for added hinge support.

Frame Construction (Both Frame Types): The head jambs and side jambs are mortised, butted and joined using (3) 7/8" x 2" wire staples. An bumper threshold OUTSWING threshold was unitilized at the sill. An optional aluminum ADA threshold is available.

TABLE OF CONTENTS

SHT #	DESCRIPTION
1	TYPICAL ELEVATIONS & GENERAL NOTES
2	VERTICAL CROSS SECTIONS & BOM
3	HORIZONTAL CROSS SECTIONS
4	ANCHORING LOCATIONS & DETAILS
5	UNIT COMPONENTS

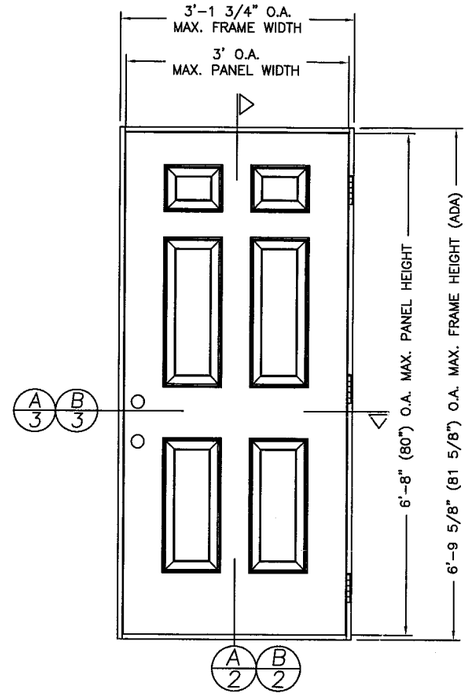

SINGLE OUTSWING UNIT (X)
SCALE: 1/2" =1'–0"

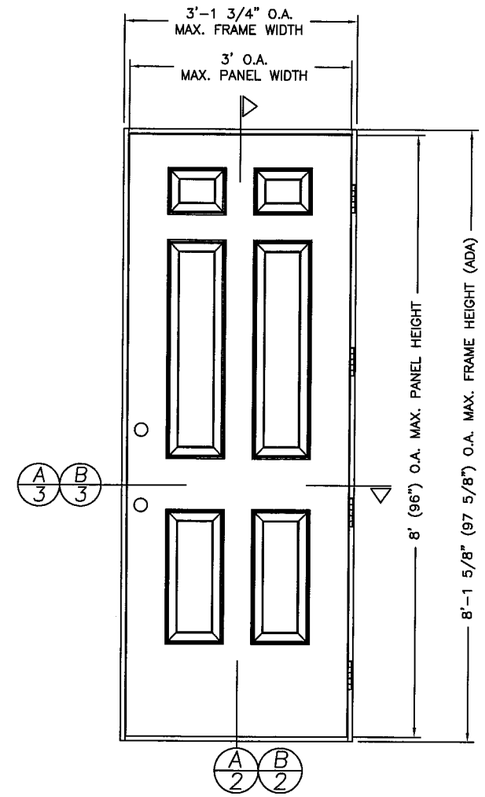

SINGLE OUTSWING UNIT (X)
SCALE: 1/2" =1'–0"

ALL DOOR MODELS ARE VIEWED FROM THE EXTERIOR SIDE

PRODUCT RENEWED
as complying with the Florida Building Code
Acceptance No. 08-0208.07
Expiration Date FEB 11, 2013
By Shaq I. Uhanda
Miami Dade Product Control Division

DESIGN PRESSURE RATING

	* WHERE WATER INFILTRATION REQUIREMENT IS NEEDED		WHERE WATER INFILTRATION REQUIREMENT IS NOT NEEDED	
6'8" (X)	+80.0psf	–80.0psf	+80.0psf	–80.0psf
8'0" (X)	+61.0psf	–65.0psf	+61.0psf	–65.0psf

* UNIT SHALL BE INSTALLED AT LOCATION PROTECTED BY OVERHANG SUCH THAT OVERHANG RATIO (OH) = OH LENGTH/OH HEIGHT GREATER THAN 1.0

Miami Dade County Building Department
0000581515 - 11/13/2008 9:56:46 AM
Door Noa 08-0208.07.pdf

Examiner	Date Time Stamp	Disp.	Trade	Stamp Name
Ana Salgueiro	10/28/2008 9:26:43 AM	A	STRU	Approved

NIMESH BHAVSAR
FLORIDA P.E. NO. 56861
2/5/08
OM ENGINEERING SERVICES, INC.
P.O. BOX 560098
ORLANDO, FL 32858
FBPE Certificate of Authorization No. 26637

JELD-WEN, INC.
3737 LAKEPORT BLVD.
KLAMATH FALLS, OR, 97601
PH. 541-882-3451

PRODUCT: 6'–8" & 8'–0" SINGLE OUTSWING OPAQUE STEEL EDGE IMPACT STEEL DOOR IN WOOD FRAME

PART OR ASSEMBLY: TYPICAL ELEVATIONS & GENERAL NOTES

REVISIONS

NO.	DATE		BY
4	12/13/07	UPDATE FORMAT/ADD ISO DETAILS	EAG
3	07/19/07	GENERAL REV.	JWJ
2	11/8/02	GENERAL REV.	KMN
1	1/10/01	6'8 anchors	RW

DATE: 12/07/07
SCALE: AS NOTED
DWG. BY: EAG
CHK. BY: S. SAFFELL
DRAWING NO.: DC9970
SHEET 1 OF 5

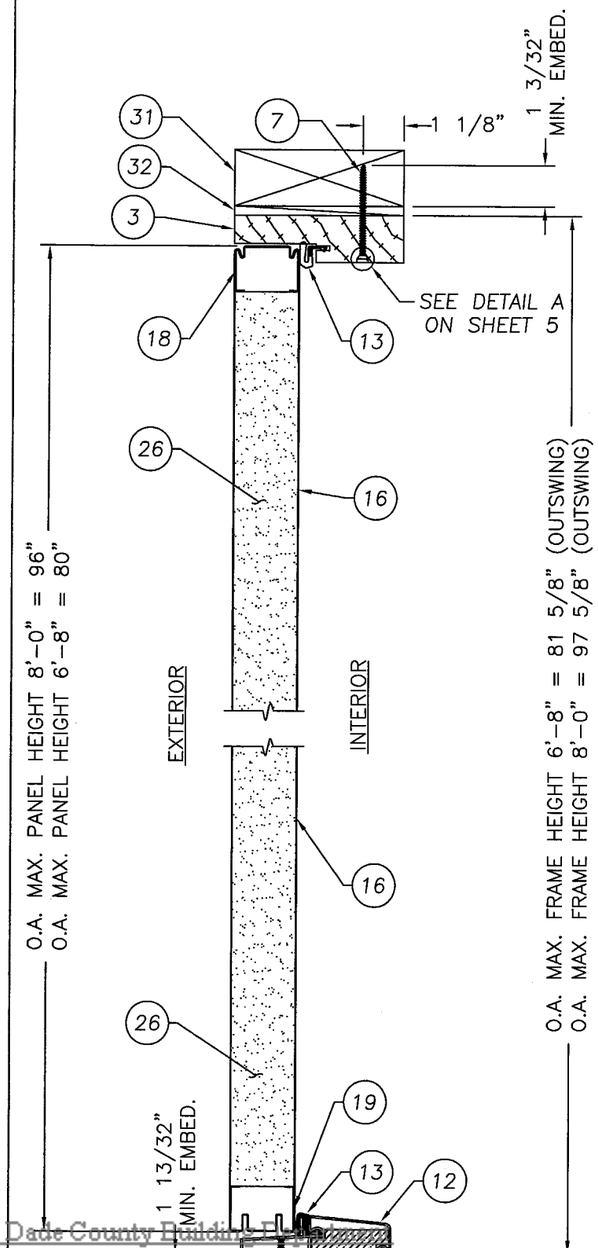

A 2 VERTICAL CROSS SECTION TYP.
WOOD FRAME INSTALLATION SCALE: 3" =1'-0"

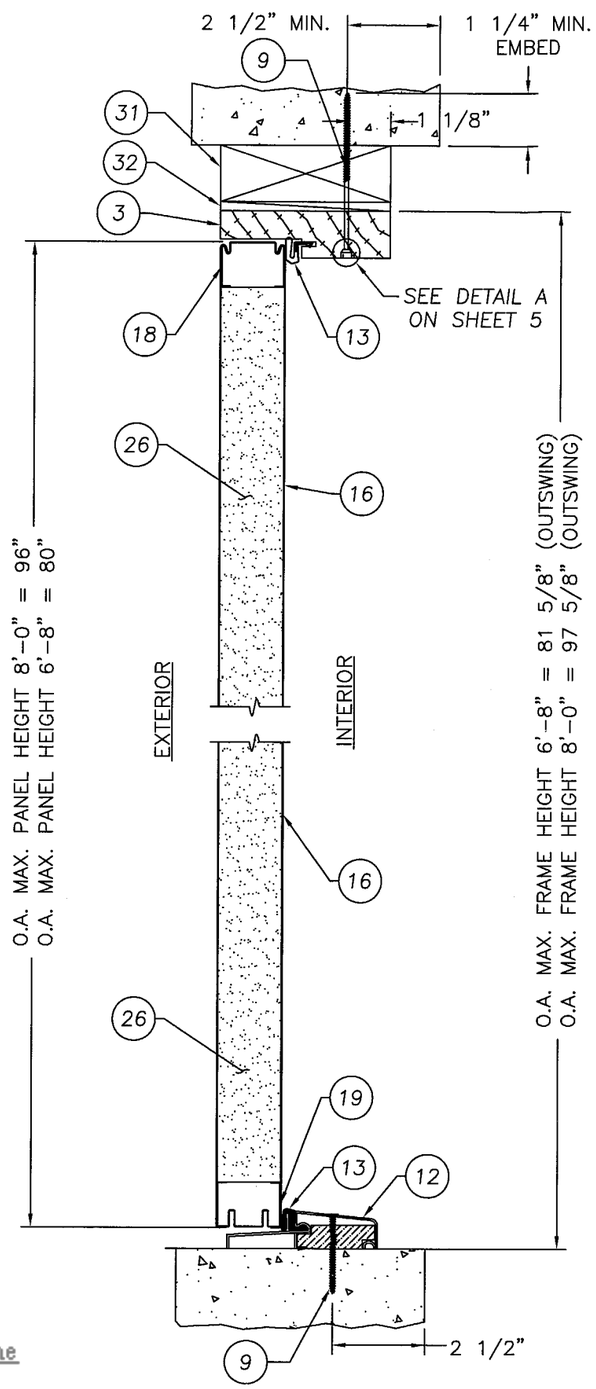

B 2 VERTICAL CROSS SECTION TYP.
CONCRETE INSTALLATION SCALE: 3" =1'-0"

ITEM	DESCRIPTION	MATERIAL
1	LATCH JAMB (1 1/4" x 4 9/16" PONDEROSA FINGER JOINTED PINE)	PINE
2	HINGE JAMB (1 1/4" x 4 9/16" PONEROSA FINGER JOINTED PINE)	PINE
3	HEAD JAMB (1 1/4" x 4 6/16" PONDERSOA FINGER JOINTED PINE)	PINE
4	4" x 4" BUTT HINGE 12ga.(.097" HAGER)	STEEL
5	#9 X 1" PFH WOOD SCREW (HINGE TO DOOR)	STEEL
6	#9 x 3/4" PFH WOOD SCREW (HINGE TO DOOR	STEEL
7	#8 PFH WOOD SCREW WITH 1.15 MIN. EMB. INTO SUB-BUCK	STEEL
8	#10 x 2" PFH WOOD SCREW	STEEL
9	3/16" TAPCON (MIN. EMBEDMENT 1 1/4" INTO MASONRY)	STEEL
10	ADA EXT. ALUMINUM THRESHOLD (MODEL 6063-T5)	ALUM.
11	NOT USED	ALUM.
12	OUTSWING BUMPER THRESHOLD (1.0" x 4.625")	–
13	COMPRESSION WEATHERSTRIP SCHLEGEL Q-LON QDS 650	FOAM
14	#12 x 3" PFH WOOD SCREW	STEEL
15	#9 x 1" PFH WOOD SCREW	STEEL
16	FACE SHEET 24GA. (.020" THK. MIN.) GALVANIZED STEEL	STEEL
17	#8 x 2" PFH WOOD SCREW	STEEL
18	TOP RAIL (1.73" x 1.21" x 0.021" THK)	STEEL
19	BOTTOM RAIL (1.73" x 1.21" x 0.021" THK)	STEEL
20	SIDE STILES (1.73" x 1.21" x 0.021" THK)	STEEL
21	WOOD LOCK BLOCK (1.67" x 3.0" x 18.75")	WOOD
22	STRIKE PLATE	–
23	MDF BOARD	MDF
24	0.50" x 1.69" DOOR BOTTOM SWEEP	VINYL
25	WOOD LOCK BLOCK	WOOD
26	EXPANDED POLYSTYRENE (1.0 to 1.25 lb. DENSITY) BY JELD-WEN	FOAM
27	KWIKSET TITAN SERIES LOCK (#200) OR (#660)	–
28	YALE HERITAGE SERIES DEADBOLT	–
29	LATCH SCREWS #8 x 1 1/2" PFH WOOD SCREW	STEEL
30	NOT USED	–
31	2X WOOD BUCK	WOOD
32	1/4" MAX. COMPRESSION SHIM	WOOD
33	16 GA. 7/16" CROWN x 2" LONG STAPLES	STEEL

PRODUCT RENEWED
as complying with the Florida
Buiding Code
Acceptance No. 08-0208.07
Expiration Date Feb 11, 2013
By Ishaq I. Chanda
Miami Dade Product Control
Division

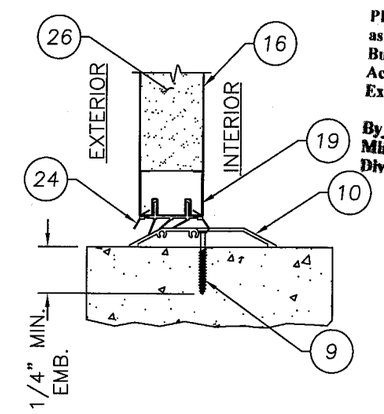

VERTICAL CROSS SECTION TYP. - OPTIONAL
CONCRETE INSTALLATION SCALE: 3" =1'-0"

Miami Dade County Building & Planning
0000581515 - 11/13/2008 9:36:45 AM
Door Noa 08-0208.07.pdf

Examiner	Date Time Stamp	Disp.	Trade	Stamp Name
Ana Salgueiro	10/28/2008 9:26:43 AM	A	STRU	Approved

JELD-WEN, INC.
3737 LAKEPORT BLVD.
KLAMATH FALLS, OR, 97601
PH. 541-882-3451

PRODUCT: 6'-8" & 8'-0" SINGLE OUTSWING OPAQUE STEEL EDGE IMPACT STEEL DOOR IN WOOD FRAME

PART OR ASSEMBLY: VERTICAL CROSS SECTIONS BILL OF MATERIAL

NO.	DATE	REVISIONS	BY
4	12/13/07	UPDATE FORMAT/ADD ISO DETAILS	EAG
3	07/19/07	GENERAL REV.	JWJ
2	11/8/02	GENERAL REV.	KMN
1	1/10/01	6'8 anchors	RW

NIMESH BHAVSAR
FLORIDA P.E. NO. 56861
2/5/07
OM ENGINEERING SERVICES, INC.
P.O. BOX 560098
ORLANDO, FL 32856
FBPE Certificate of Authorization No. 26637

DATE: 12/07/07
SCALE: AS NOTED
DWG. BY: EAG
CHK. BY: S. SAFFELL
DRAWING NO.: DC9970
SHEET 2 OF 5

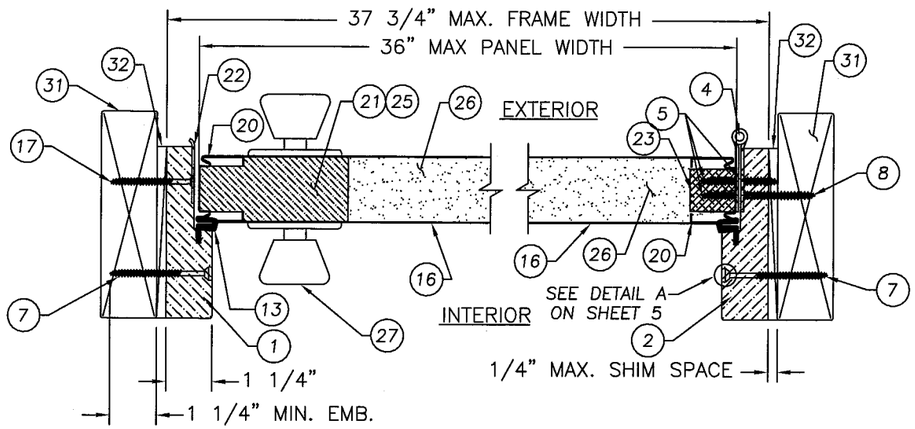

A/3 HORIZONTAL CROSS SECTION TYP. WOOD INSTALLATION SCALE: 3" =1'-0"

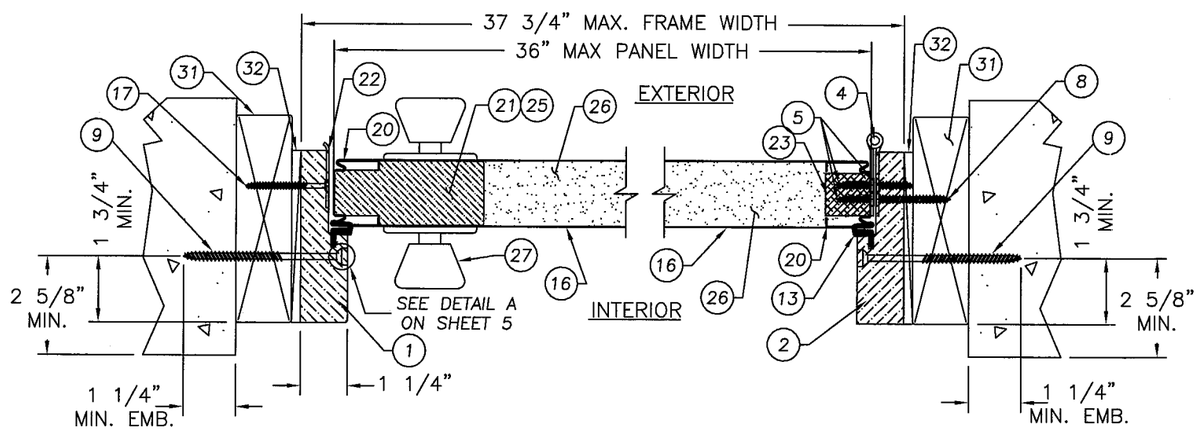

B/3 HORIZONTAL CROSS SECTION TYP. CONCRETE INSTALLATION SCALE: 3" =1'-0"

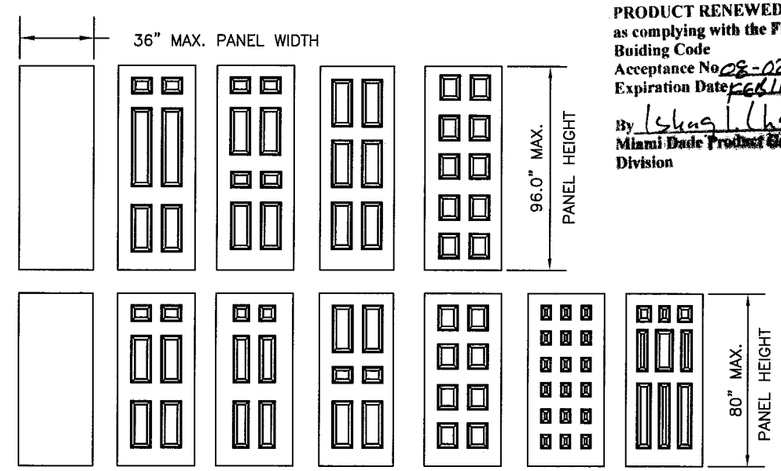

PRODUCT RENEWED
as complying with the Florida Buiding Code
Acceptance No 08-0208.07
Expiration Date FEB 11, 2013
By Ishaq I. Chand
Miami Dade Product Control Division

Miami Dade County Building Department
0000581515 - 11/13/2008 9:56:46 AM
Door Noa 08-0208.07.pdf

Examiner	Date Time Stamp	Disp.	Trade	Stamp Name
Ana Salgueiro	10/28/2008 9:26:43 AM	A	STRU	Approved

JELD-WEN, INC.
3737 LAKEPORT BLVD.
KLAMATH FALLS, OR, 97601
PH. 541-882-3451

PRODUCT: 6'-8" & 8'-0" SINGLE OUTSWING OPAQUE STEEL EDGE IMPACT STEEL DOOR IN WOOD FRAME

PART OR ASSEMBLY: HORIZONTAL CROSS SECTIONS

REVISIONS

NO.	DATE	BY
4	12/13/07	EAG
3	07/19/07	JWJ
2	11/8/02	KMN
1	1/10/01	RW

UPDATE FORMAT/ADD ISO DETAILS
GENERAL REV.
GENERAL REV.
6'8 anchors

NIMESH BHAVSAR
FLORIDA P.E. NO. 56861
OM ENGINEERING SERVICES, INC.
P.O. BOX 560098
ORLANDO, FL 32856
FBPE Certificate of Authorization No. 26637

DATE: 12/07/07
SCALE: AS NOTED
DWG. BY: EAG
CHK. BY: S. SAFFELL
DRAWING NO.: DC9970
SHEET 3 OF 5

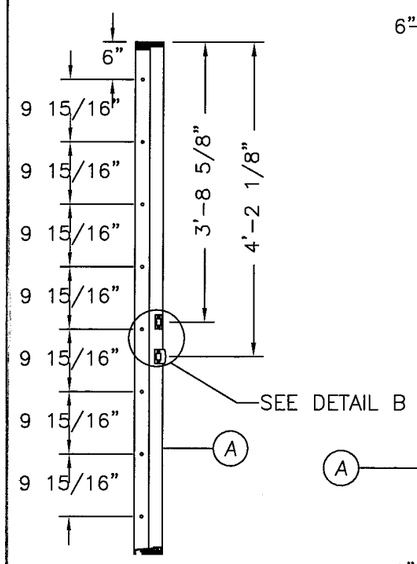

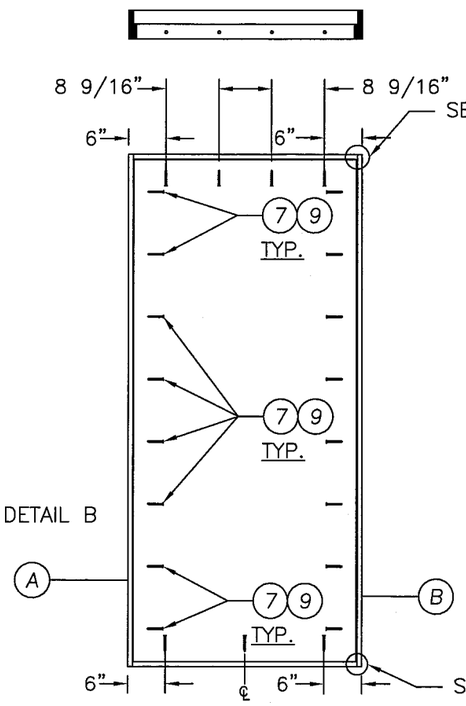

ANCHORING LOCATIONS
OUTSWING SINGLE UNIT (X)
SCALE: 1/2" =1'-0"

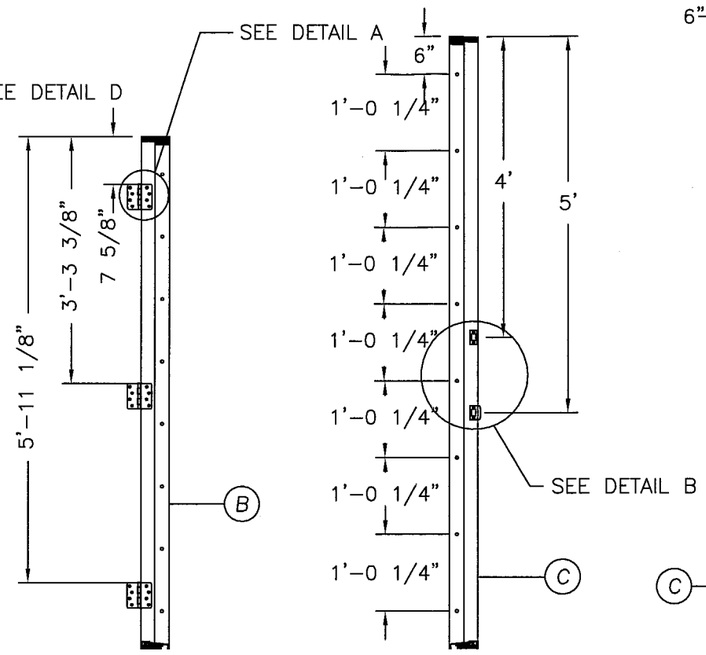

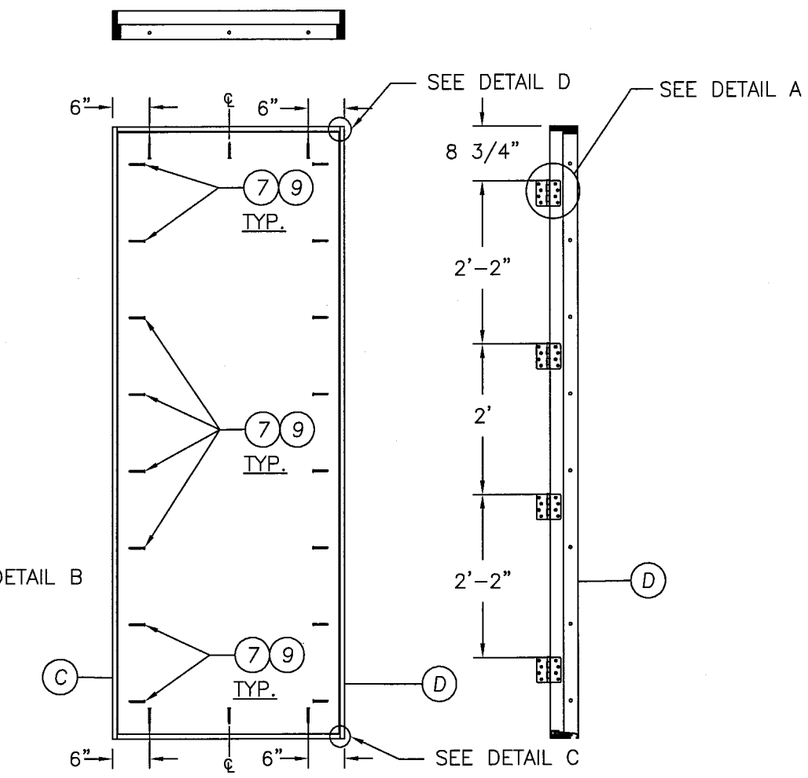

ANCHORING LOCATIONS
OUTSWING SINGLE UNIT (X)
SCALE: 1/2" =1'-0"

ALL DOOR MODELS ARE VIEWED
FROM THE INTERIOR SIDE

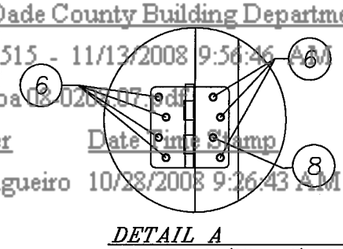

DETAIL A
SCALE: 3/8" =1'-0"

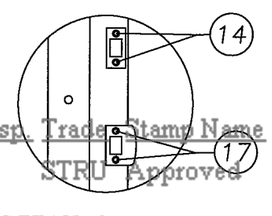

DETAIL B
SCALE: 3/8" =1'-0"

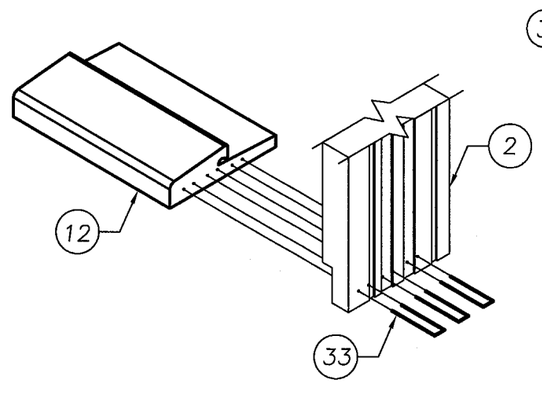

DETAIL C
SCALE: 3" =1'-0"

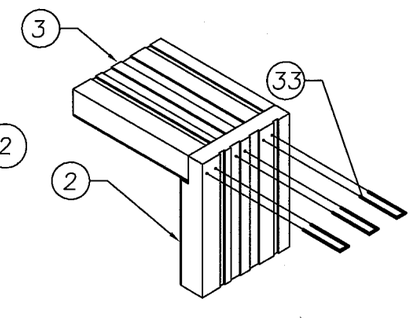

DETAIL D
SCALE: 3" =1'-0"

Miami Dade County Building Department
0000581515 - 11/13/2008 9:56:46 AM
Door No a08-0208.07.pdf
Examiner Date Time Stamp Disp. Trade Stamp Name
Ana Salgueiro 10/28/2008 9:26:43 AM A STRU Approved

PRODUCT RENEWED
as complying with the Florida Buiding Code
Acceptance No 08-0208.07
Expiration Date FEB 11, 2013
By Ishaq I. Chand
Miami Dade Product Control Division

JELD-WEN, INC.
3737 LAKEPORT BLVD.
KLAMATH FALLS, OR, 97601
PH. 541-882-3451

PRODUCT: 6'-8" & 8'-0" SINGLE OUTSWING OPAQUE STEEL EDGE IMPACT STEEL DOOR IN WOOD FRAME

PART OR ASSEMBLY: ANCHORING LOCATIONS & DETAILS

REVISIONS

NO.	DATE	BY	
4	12/13/07	EAG	UPDATE FORMAT/ADD ISO DETAILS
3	07/19/07	JWJ	GENERAL REV.
2	11/8/02	KMN	GENERAL REV.
1	1/10/01	RW	6'8 anchors

NIMESH BHAVSAR
FLORIDA P.E. NO. 56861
2/5/08
OM ENGINEERING SERVICES, INC.
P.O. BOX 560098
ORLANDO, FL 32856
FBPE Certificate of Authorization No. 26637

DATE: 12/07/07
SCALE: AS NOTED
DWG. BY: EAG
CHK. BY: S. SAFFELL
DRAWING NO.: DC9970
SHEET 4 OF 5

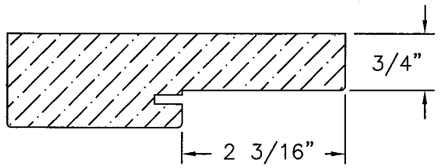

1 WOOD JAMB FINGERJOINTED PINE
SCALE: 6" =1'-0"

2

3

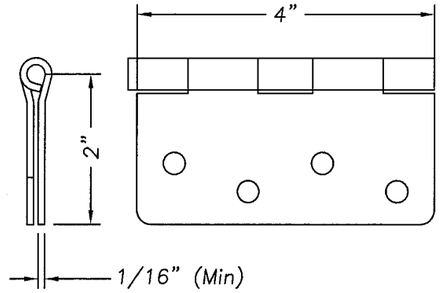

4 BUTT HINGE 4x4x12 GA.
SCALE: 6" =1'-0"

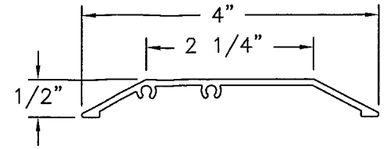

10 ADA ALUMINUM THRESHOLD
SCALE: 6" =1'-0"

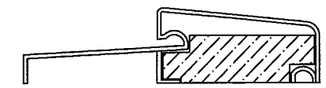

12 OUTSWING THRESHOLD
SCALE: 6" =1'-0"

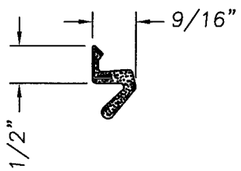

13 COMPRESSION WEATHERSTRIP
SCALE: 6" =1'-0"

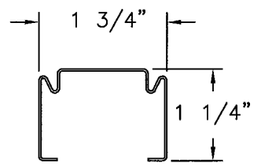

18 20 DOOR TOP RAIL & SIDE STILE
SCALE: 6" =1'-0"

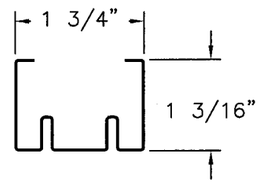

19 BOTTOM RAIL
SCALE: 6" =1'-0"

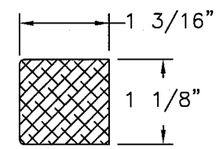

23 MDF BOARD
SCALE: 6" =1'-0"

PRODUCT RENEWED
as complying with the Florida
Buiding Code
Acceptance No 08-0208.07
Expiration Date FEB 14, 2013
By Shag L. Chanda
Miami Dade Product Control
Division

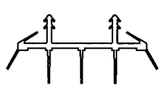

24 VINYL BOTTOM DOOR SWEEP
SCALE: 6" =1'-0"

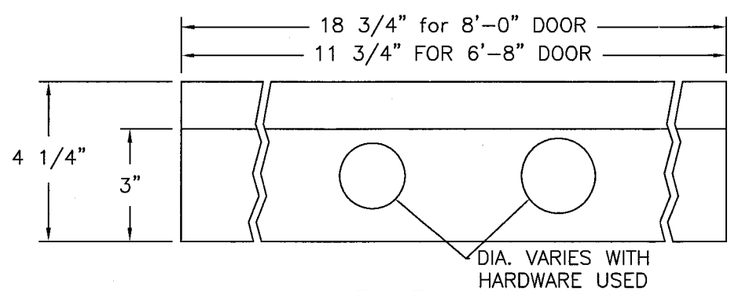

21 25 LOCK BLOCK
SCALE: 3" =1'-0"

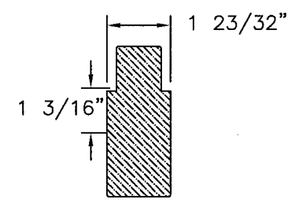

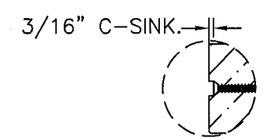

DETAIL A
SCALE: 1/4" =1'-0"

Miami Dade County Building Department
0000581515 - 11/13/2008 9:56:46 AM
Door Noa 08-0208.07.pdf

Examiner	Date Time Stamp	Disp.	Trade	Stamp Name
Ana Salgueiro	10/28/2008 9:26:43 AM	A	STRU	Approved

NIMESH BHAVSAR
FLORIDA P.E. NO. 56861

OM ENGINEERING SERVICES, INC.
P.O. BOX 560098
ORLANDO, FL 32856
FBPE Certificate of Authorization No. 26637

JELD-WEN, INC.
3737 LAKEPORT BLVD.
KLAMATH FALLS, OR, 97601
PH. 541-882-3451

PRODUCT: 6'-8" & 8'-0" SINGLE OUTSWING OPAQUE STEEL EDGE IMPACT STEEL DOOR IN WOOD FRAME

PART OR ASSEMBLY: UNIT COMPONENT

REVISIONS

NO.	DATE	BY
4	12/13/07	EAG
3	07/19/07	JWJ
2	11/8/02	KMN
1	1/10/01	RW

UPDATE FORMAT/ADD ISO DETAILS
GENERAL REV.
GENERAL REV.
6'8 anchors

DATE: 12/07/07
SCALE: AS NOTED
DWG. BY: EAG
CHK. BY: S. SAFFELL
DRAWING NO.: DC9970
SHEET 5 OF 5