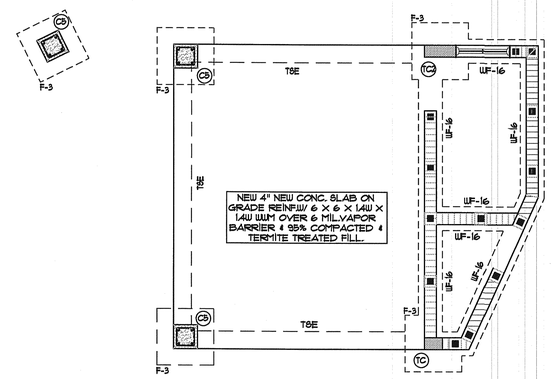

GAZEBO FOUNDATION PLAN

SCALE: 1/4"=1'-0"

LEGEND

- NEW 8" BEARING CMU WALL REINF.
- #5 REBAR @ 40" IN C OF FILLED CELL,UNLESS OTHER WISE NOTED
- WF- WALL FOOTING.
- TBE. THICKENED SLAB EDGE. SEE TYPICAL DETAIL ON THIS SHEET
- NEW CONC. COLUMN.

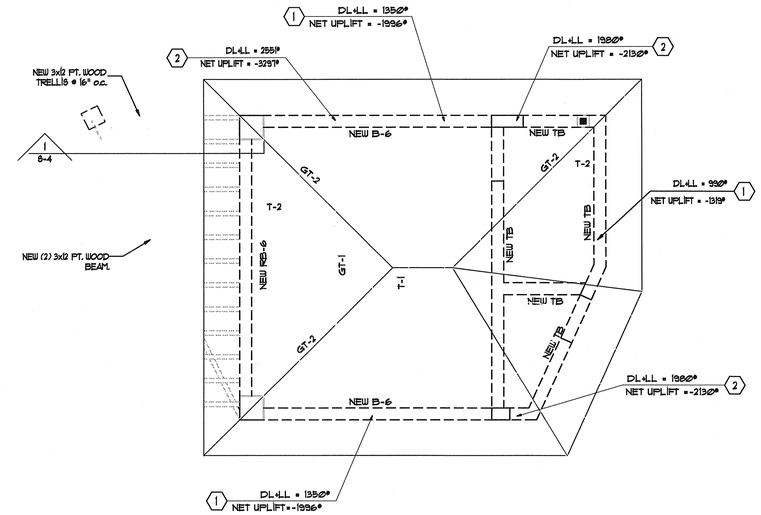

GAZEBO ROOF FRAMING PLAN

SCALE: 1/4"=1'-0"

LEGEND

- CONC. BEAM / TIE BEAM.
- GT PREF. GIRDER TRUSS
- T PREF. WOOD TRUSS
- CONC. COLUMN.

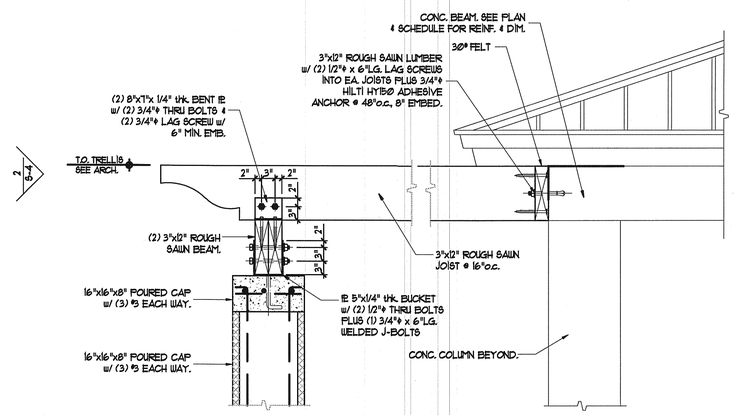

SECTION 1
3/4"=1'-0"

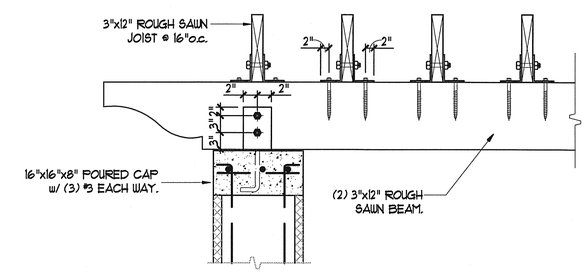

SECTION 2
3/4"=1'-0"

Miami Dade County Building Department
0000824936 - 6/1/2011 8:59:11 AM
S-4-05032011.PDF

Examiner	Date Time Stamp	Disp.	Trade	Stamp Name
Ana Salguero	5/10/2011 7:12:45 AM	V	STRU	Void

NOTE: (F.B.C. 109.3.6.4.4) "TO THE BEST OF THE ARCHITECT'S KNOWLEDGE, THE PLANS AND SPECIFICATIONS COMPLY WITH THE APPLICABLE MINIMUM BUILDING CODES AND THE APPLICABLE FIRE-SAFETY STANDARDS AS DETERMINED BY THE LOCAL AUTHORITY IN ACCORDANCE WITH THIS SECTION AND CHAPTER 633 OF THE FLORIDA STATUES."

DESIGN TEAM:

JULIO PULIDO, AIA
ARCHITECTURE - PLANNING
12721 S.W. 30 ST. MIAMI, FL 33175
PH: (305) 505-6910 - AR93904

MIAMI ENGINEERING SERVICES
5665 WEST 20 AVE, # 315 HIALEAH, FL 33012
PHONE: 305 556 2542 CA 27354
mes@miamiesinc.com http://www.miamiesinc.com

JORGE LUIS FLEITAS
P.E. 55340
16500 N.W. 91st ct.
Miami Lakes, Florida 33018
Cel: 305-401-4395

AIDA SARDINAS, P.E
P.E. 61836
15263 SW 35th TERRACE
Miami, Florida 33185
(786) 514-2584

PROJECT:

OWNER:
EDUARDO DUQUE
YUDELKIS ESPINOSA
11245 SW 58 TERRACE
MIAMI, FL 33156

PROJECT:
ADDITION, RENOVATION AND REMODELING TO:
CANAL RESIDENCE
11245 SW 58 TERRACE
MIAMI, FL 33156

MANAGEMENT:

#	REVISIONS	DATE

DATE :	MARCH 04, 2011
PROJECT No. :	042-11
DRAWN BY:	L.P.
CHECKED BY:	J.P.

SHEET TITLE:
GAZEBO FOUNDATION & ROOF PLAN

SHEET No:
S-4