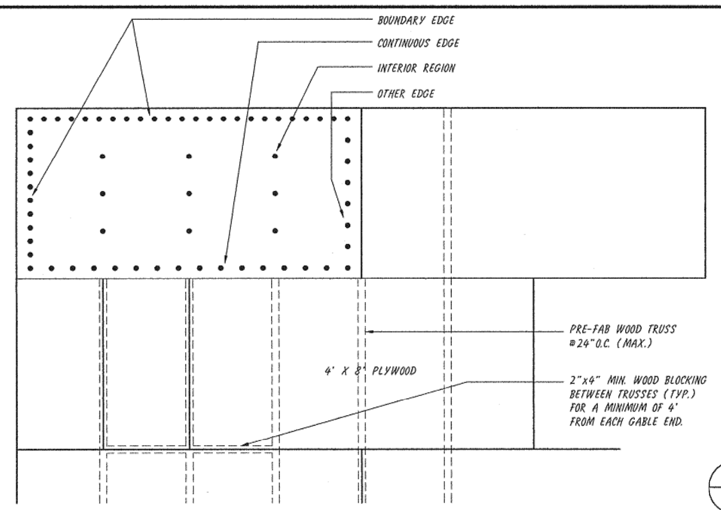

1. ALL PLYWOOD SHALL BE MIN. 5/8" C-D OR C-C WITH 2x BLOCKING AT ALL UNSUPPORTED EDGES IN ACCORDANCE TO APA 32/16 SPECIFICATIONS AND PLACED WITH FACE GRAIN PERPENDICULAR TO SUPPORTS.
2. 10d X 2" RINGSHANK NAILS @ 4" O.C. AT BOUNDARY & CONTINUOUS EDGES. 10d x 2-1/2" (R.S.) AT GABLE ENDS
   6" O.C. AT ALL OTHER EDGES
   6" O.C. AT INTERIOR REGIONS

G9 / S-3 ROOF SHEATHING NAILING PATTERN
SCALE : 1/2" = 1'-0"

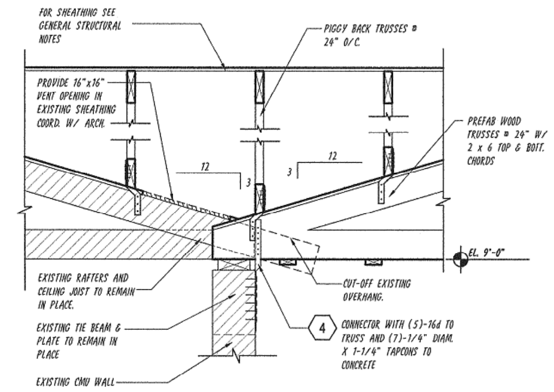

G7 / S-3 TRUSS BEARING AT EXISTING WALL DETAIL
SCALE : 3/4" = 1'-0"

TRUSS & RAFTER CONNECTORS SCHEDULE
(NU-VUE, INC CONNECTORS AS FOLLOWS:)

MARK	CONNECTOR TYPE	CONNECTOR MODEL No.	CONNECTOR MIAMI-DADE COUNTY, FL. N.O.A. No.	UPLIFT AVAILABLE (LBS.)	FASTENERS QUANTITY	FASTENERS NAIL SIZE	FASTENERS INTO	REMARKS
1	NU-VUE EMBEDDED TRUSS ANCHOR DOUBLE STRAPS	NVHTA-16	09.0721.05	2,429	(6)	10d x 1½"	SEAT	
					(16)	10d x 1½"	STRAPS	
2	EMBEDDED TRUSS ANCHORS, DOUBLE STRAPS	NVHTA-20H	09.0721.05	3,117	(6)	10d x 1½"	SEAT	
					(18)	10d x 1½"	STRAPS	
3	EMBEDDED TRUSS ANCHORS, SINGLE STRAP	NVSTA-16	09.0721.05	1,426	(6)	10d x 1½"	SEAT	
					(9)	10d x 1½"	STRAPS	
4	STRAP RAFTER TIE	NVRT-16	08.0326.11	860	(5)	16d	TRUSS	
					(5)	16d	EXISTING TRUSS	
5	FABRICATED CONNECTOR	SEE DETAIL "G7" ON SHEET S-4						

VOID
This sheet only.
Not part of this permit
per Unsafe Structures Unit

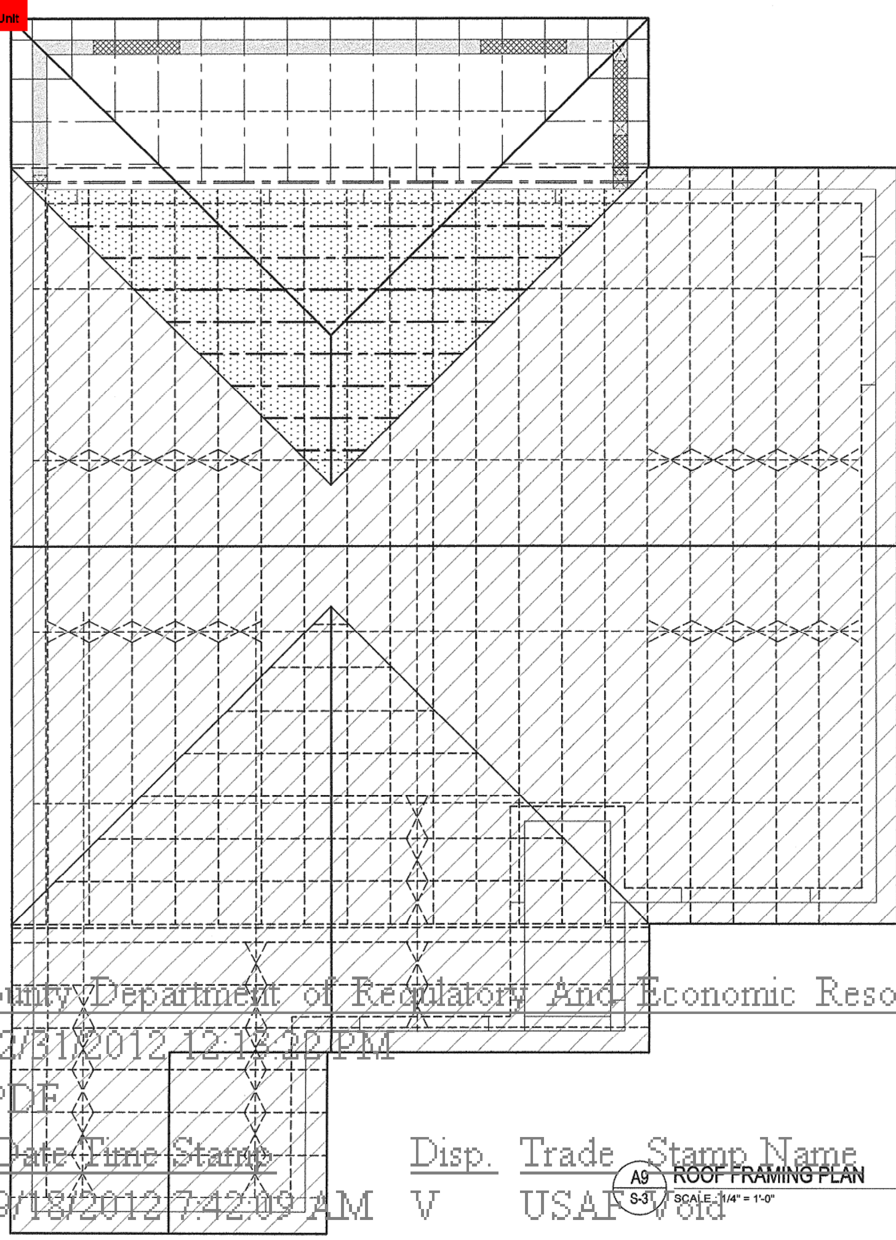

A9 / S-3 ROOF FRAMING PLAN
SCALE : 1/4" = 1'-0"

Miami Dade County Department of Regulatory And Economic Resources
0000830059 - 12/31/2012 12:18:22 PM
S-3-07172012.PDF
Examiner | Date Time Stamp | Disp. | Trade | Stamp Name
Gerardo Torre | 9/18/2012 7:42:09 AM | V | USAF | Void

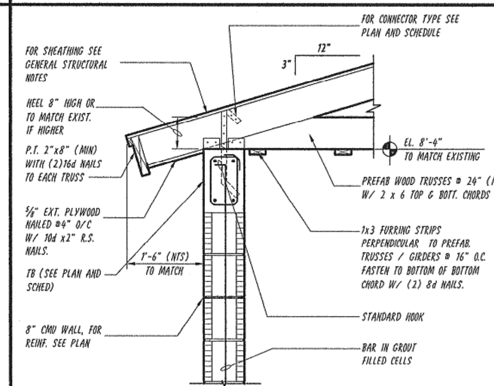

E7 / S-3 TYPICAL TRUSS BEARING DETAIL
SCALE : 3/4" = 1'-0"

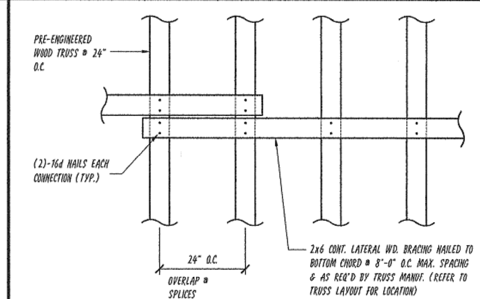

E5 / S-3 BOTTOM CHORD BRACING DETAIL
SCALE : 1/2" = 1'-0"

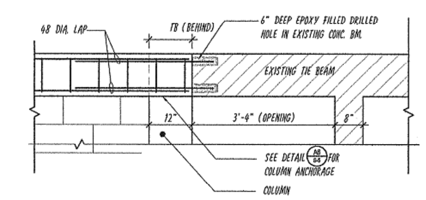

E3 / S-3 NEW TO EXISTING TIE BEAM CONN. DETAIL
SCALE : 1/2" = 1'-0"

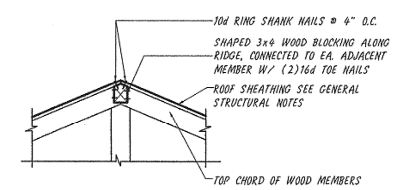

D5 / S-3 RIDGE LINE BLOCKING DETAIL
SCALE : 1/4" = 1'-0"

ROOF FRAMING NOTES:

1. ALL PRE-FABRICATED WOOD TRUSSES SHALL BE SPACED @ 24" O.C. (MAXIMUM) TRUSS ENGINEER TO DESIGN ADDITIONAL BRACING AS NEEDED. (2"x6" MINIMUM CHORDS)
2. ALL LATERAL BRACING SHALL BE 2x8 W/ 2-16d NAILS @ EACH CONNECTION.
3. ALL ROOFING FASTNERS AND/OR NAILS SHALL BE HOT DIPPED GALVANIZED AND OF SUFFICENT LENGTH TO PENETRATE THROUGH THE ROOFING FELTS AND SHEATHING BY NOT LESS THAN 3/4 INCH.
4. ALL ROOFING ACCESSORIES AND MATERIALS SHALL HAVE MIAMI-DADE COUNTY PRODUCT CONTROL APPROVAL AND MUST BE INSTALLED IN ACCORDANCE WITH THE REQUIREMENTS AND DIRECTIVES OF THE NOTICE OF ACCEPTANCE ISSUED FOR EACH INDIVIDUAL PRODUCT OF THE SYSTEM.
5. ROOF SHEATHING SHALL BE A.P.A. RATED, NOT LESS THAN 5/8" (19/32") EXTERIOR GLUE TYPE PLYWOOD SHEATHING AND SHALL HAVE MANUFACTURER'S PRODUCT STAMP CLEARLY VISIBLE. INSTALL SHEATHING IN ACCORDANCE WITH REQUIREMENTS OF F.B.C. CHAPTER 23. SHEATHING SHALL BE NAILED TO ROOF TRUSSES TO FORM A DIAPHRAGM USING NO. 10d GALV. RING SHANK NAILS (3"x0.135 MIN. SHANK DIA. AND RING OF 0.012 DIA. OR LARGER) AT NOT MORE THAN 6 INCHES AT INTERIOR FIELD, INTERIOR PANEL EDGES AND EXTERIOR PANEL EDGES. PROVIDE NO. 10D NAILS SPACED AT 4 INCHES MAXIMUM AT GABLE ENDS IF APPLICABLE.
6. BLOCKED & UNBLOCKED PLYWOOD DIAPHRAGM SHALL CONSIST OF 5/8" STRUCTURAL GRADE I PLYWOOD CONTINUOUS OVER TWO OR MORE SPANS, FACE GRAIN PERPENDICULAR TO SUPPORTS, FASTENED WITH 10d GALV. RING SHANK 1 NAILS, 1-½" MIN. PENETRATION IN 2" MIN. NOMINAL FRAMING MEMBERS SPACED AT 24" O.C. AT ROOF DIAPHRAGM BOUNDARY PANELS & AT 6" O.C. AT ALL OTHER PLYWOOD PANEL EDGES AND ALONG INTERMEDIATE FRAMING MEMBERS.

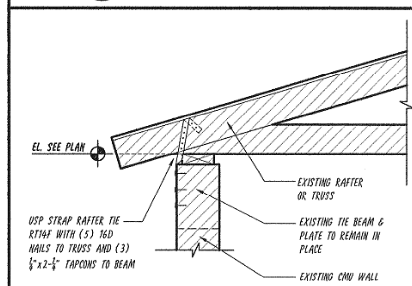

NOTE:
PROVIDE AT LOCATIONS WHERE RAFTERS OR TRUSSES WERE NOT ANCHORED TO THE TIE BEAM WHEN ORIGINALLY INSTALLED.

C7 / S-3 MISSING STRAP DETAIL
SCALE : 3/4" = 1'-0"

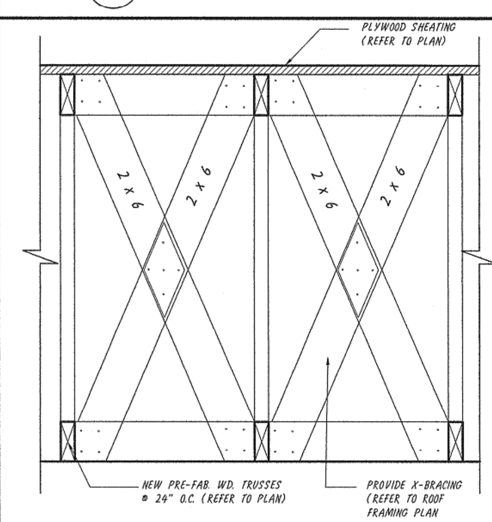

NOTE:
FASTEN 2x WOOD BLOCKING TO TRUSS TOP/BOTT. CHORD W/"USP" JA5G FRAMING ANGLE W/(6)-16d NAILS TO TRUSS CHORDS AND (6)-10dx1½" NAILS TO WOOD BLOCKING.
FASTEN 2x6 X-BRACING TO 2xWD BLOCKING W/(4)-16d NAILS EA. CONNECTION.

A5 / S-3 TYPICAL RIDGE BRACING DETAIL
SCALE: 1" = 1'-0"

ROOF NOTES

"+" : DEAD LOAD PLUS LIVE LOAD GIRDER TRUSS REACTION

"-" : NET WIND UPLIFT GIRDER TRUSS REACTION.

"CB" : 2 X 6 VERTICAL WOOD "CROSS" BRACING CONNECTED TO TRUSSES AT EACH CONTACT POINT W/ 2- 16d NAILS. SEE TRUSS MANUFACTURER SHOP DRAWINGS AND CALCULATIONS FOR ADDITIONAL CHORD AND WEB BRACING.

"HB" : 2 X 6 CONTINUOUS HORIZ. WOOD BOTT. CHORD BRACING CONNECTED TO THE TOP OF EVERY TRUSS BOTTOM CHORD W/ 2- 16d NAILS. MAXIMUM SPACING BETWEEN BRACINGS SHALL BE 10'-0" SEE TRUSS MANUFACTURER SHOP DRAWINGS AND CALCULATIONS FOR ADDITIONAL CHORD AND WEB BRACING.

TRUSS MANUFACTURE TO COORDINATE TRUSS BOTTOM CHORD ELEVATION W/ ARCHITECTURAL DRAWINGS.

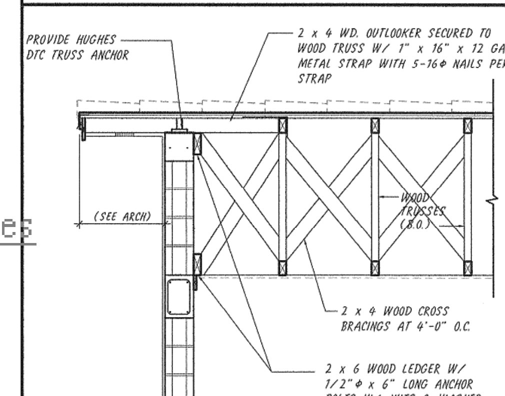

A7 / S-3 MASONRY GABLE END DETAIL
SCALE : 1/2" = 1'-0"

ROOF LEGEND:

Symbol	Meaning
[X]	COLUMN BELOW
shaded	CONCRETE TB/BEAM
hatched band	OPENING BELOW
hatched	EXISTING CONSTRUCTION TO REMAIN
1 (hexagon)	CONNECTOR TYPE
DL=718#	DEAD LOAD
LL=798#	LIVE LOAD
UP.L=712#	UPLIFT
dotted	ROOF CRICKET AREA. EXTEND TRUSSES TOP CHORD TO FORM FRAMING

TO THE BEST OF MY KNOWLEDGE THESE PLANS CONFORM TO THE STRUCTURAL REQUIREMENTS OF F.B.C. 2010, LATEST REVISIONS, INCLUDING SECTIONS PERTAINING TO H.V.H.Z.
A. JACK MESSULAM, PE
FL P.E. #12326
CONSULTING ENGINEER
TEL: 305-665-5032
5121 ORDUNA DRIVE, CORAL GABLES, FLORIDA 33146

Note
The above drawings, designs, and ideas are the property of Pedro G. Suaréz, R.A. No part thereof shall be copied, disclosed to others, or used in connection with any work other than for the specific project for which they have been prepared without the written consent of Pedro G. Suaréz, R.A.

PEDRO G. SUAREZ, A.I.A
Architecture • Interior Design • Planning
5961 SW 96th Avenue, Miami, Florida 33173, Phone (305) 443-2713, Fax (305) 443-5215
E-MAIL: psuarez@pgsarchitects.com
ID 4763 - AR-13718

Commission No. 1203
Date 05/22/12
Drawn PS
Checked AJM
Revisions
1 ____ By ____
2 ____ By ____
3 ____ By ____
4 ____ By ____
5 ____ By ____

Project Title
RAMOS RESIDENCE
PROPOSED ADDITION
13328 S.W. 112TH COURT
MIAMI, FLORIDA 33176

Sheet No.
S-3
of 5