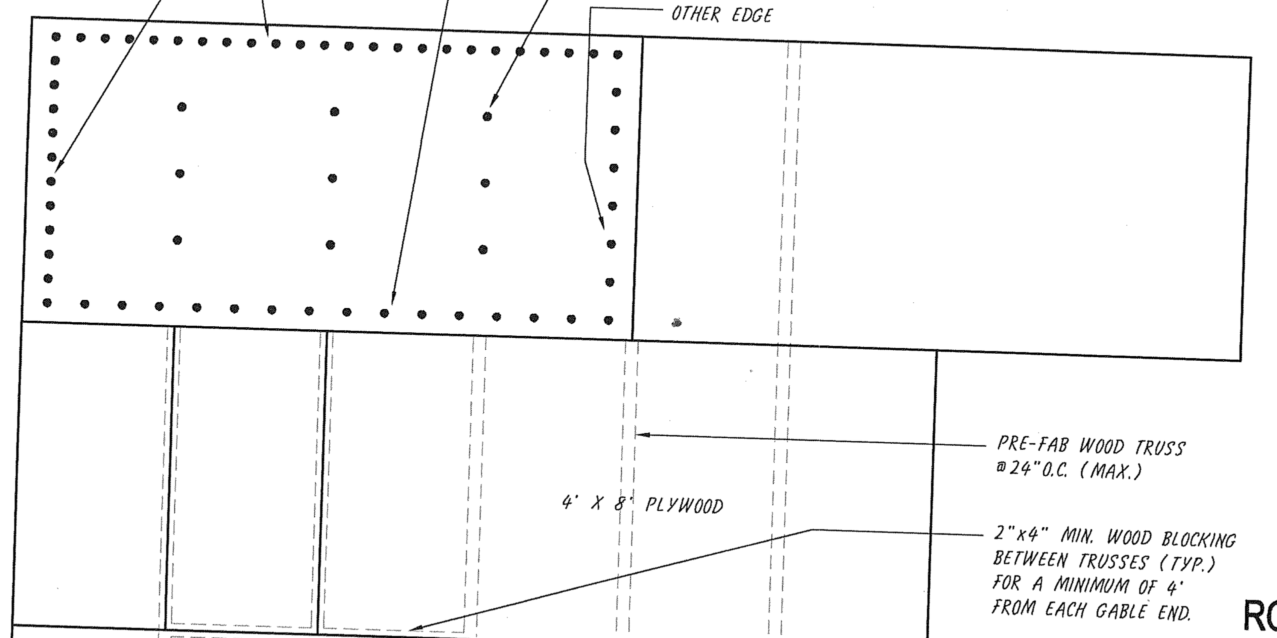

1. ALL PLYWOOD SHALL BE MIN. 5/8" C-D OR C-C WITH 2x BLOCKING AT ALL UNSUPPORTED EDGES IN ACCORDANCE TO APA 32/16 SPECIFICATIONS AND PLACED WITH FACE GRAIN PERPENDICULAR TO SUPPORTS.
2. 10d X 2" RINGSHANK NAILS @ 4" O.C. AT BOUNDARY & CONTINUOUS EDGES. 10d x 2-1/2" (R.S.) AT GABLE ENDS. 6" O.C. AT ALL OTHER EDGES. 6" O.C. AT INTERIOR REGIONS

G9 / S-3 ROOF SHEATHING NAILING PATTERN
SCALE : 1/2" = 1'-0"

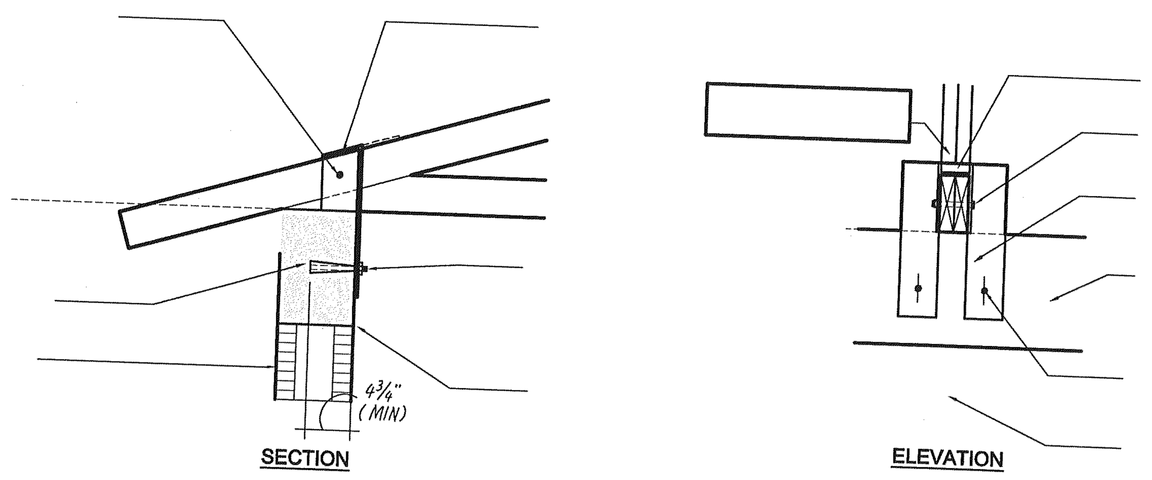

F7 / S-3 (2) GIRDER TRUSS TO CONC. TIE BEAM CONNECTION DETAIL
SCALE : 3/4" = 1'-0"

MAX. UPLIFT CAPACITY = 3,360# (1 MEMBER, 2 BOLTS)
7,135# (2 MEMBER, 2 BOLTS)
4¾" MIN. EMBEDMENT

TRUSS & RAFTER CONNECTORS SCHEDULE
(NU-VUE, INC CONNECTORS AS FOLLOWS:)

MARK	CONNECTOR TYPE	CONNECTOR MODEL No.	CONNECTOR MIAMI-DADE COUNTY, FL. N.O.A. No.	UPLIFT AVAILABLE (LBS.)	FASTENERS QUANTITY	FASTENERS NAIL SIZE	FASTENERS INTO	REMARKS
1	NU-VUE EMBEDDED TRUSS ANCHOR	NVSTA-16	09-0721.05	1,426	(6)	10d x 1½"	SEAT	
					(9)	10d x 1½"	STRAP	
2	FABRICATED CONNECTOR	SEE DETAIL "F7" ON SHEET S-3						
3	STRAP RAFTER TIE	NVRT-20	08-0326.11	725	(4)	16d	TRUSS	
					(4)	16d	EXISTING TRUSS	
4	NU-VUE TWISTED ANCHOR	NVRT-16	08-0326.11	1,426	(4)	16d	TRUSS	NEAR & FAR SIDES
					(4)	¼" TAPCONS	CONCRETE	
5								
6								
7								

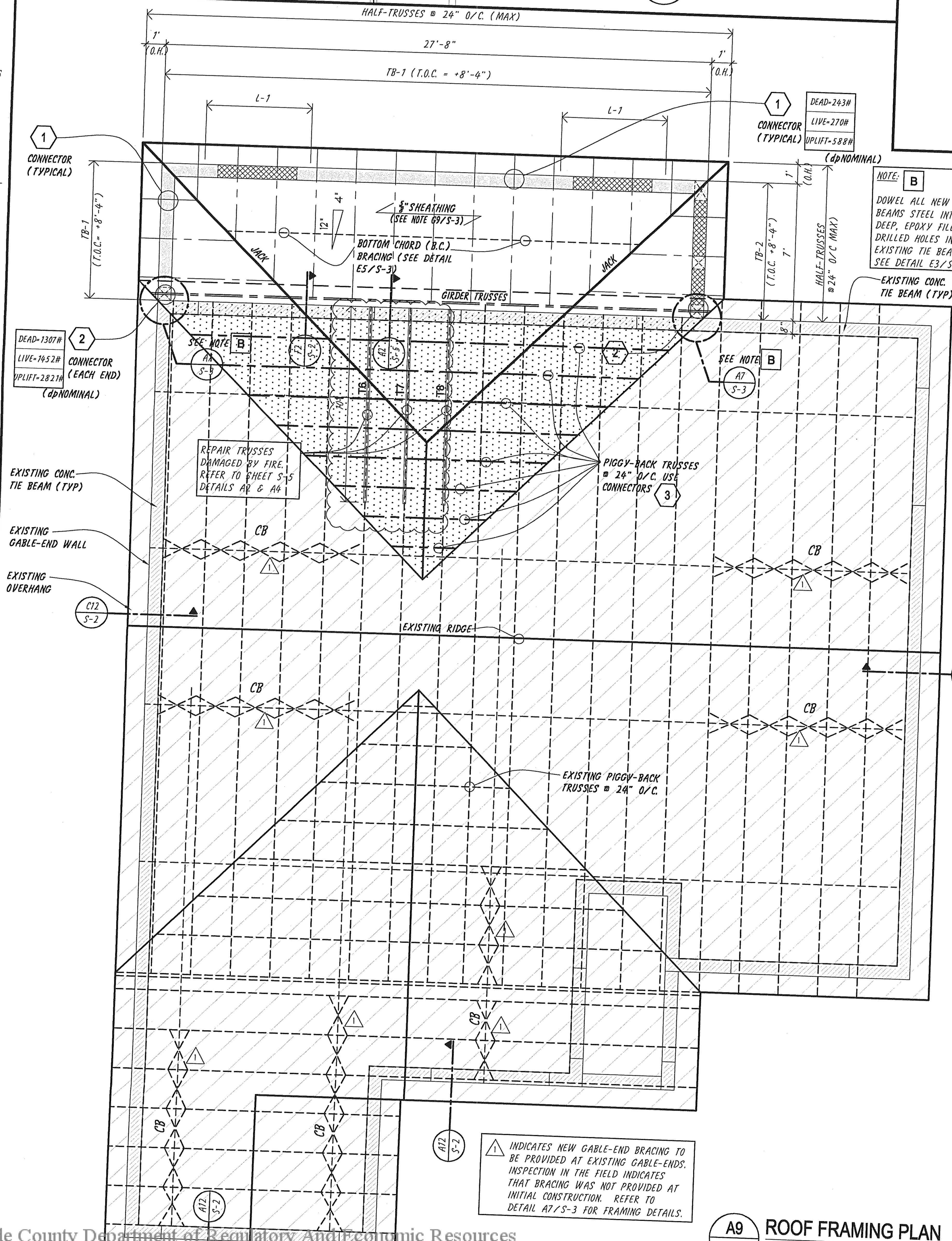

⚠1 INDICATES NEW GABLE-END BRACING TO BE PROVIDED AT EXISTING GABLE-ENDS. INSPECTION IN THE FIELD INDICATES THAT BRACING WAS NOT PROVIDED AT INITIAL CONSTRUCTION. REFER TO DETAIL A7/S-3 FOR FRAMING DETAILS.

A9 / S-3 ROOF FRAMING PLAN
SCALE : 1/4" = 1'-0"

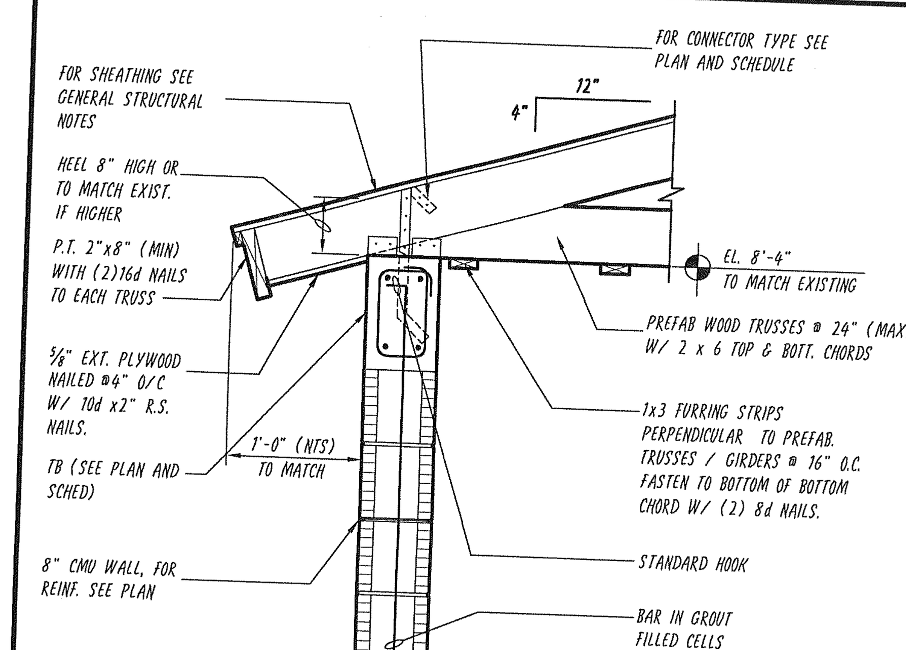

D7 / S-3 TYPICAL TRUSS BEARING DETAIL
SCALE : 3/4" = 1'-0"

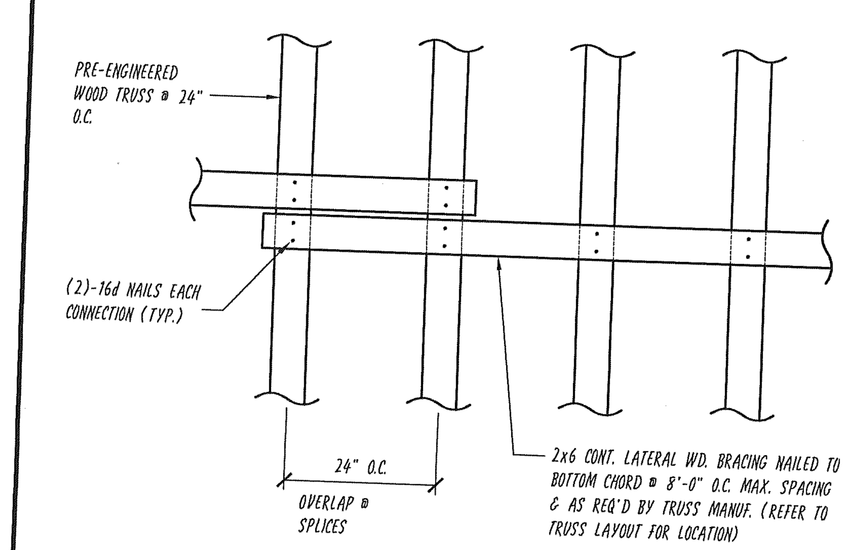

D5 / S-3 BOTTOM CHORD BRACING DETAIL
SCALE : 1/2" = 1'-0"

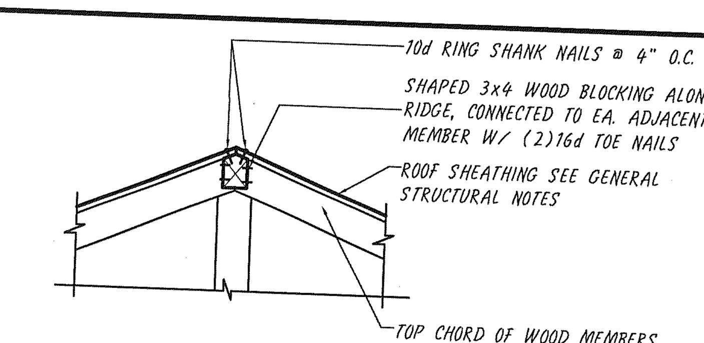

D5 / S-3 RIDGE LINE BLOCKING DETAIL
SCALE : 1/4" = 1'-0"

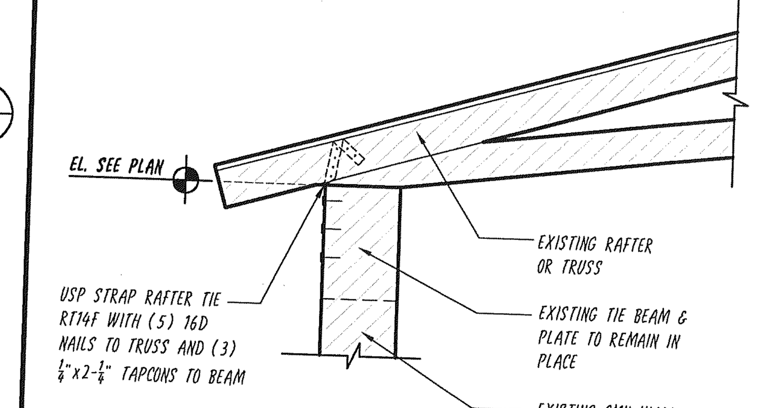

NOTE:
PROVIDE AT LOCATIONS WHERE RAFTERS OR TRUSSES WERE NOT ANCHORED TO THE TIE BEAM WHEN ORIGINALLY INSTALLED.

B7 / S-3 MISSING STRAP DETAIL
SCALE : 3/4" = 1'-0"

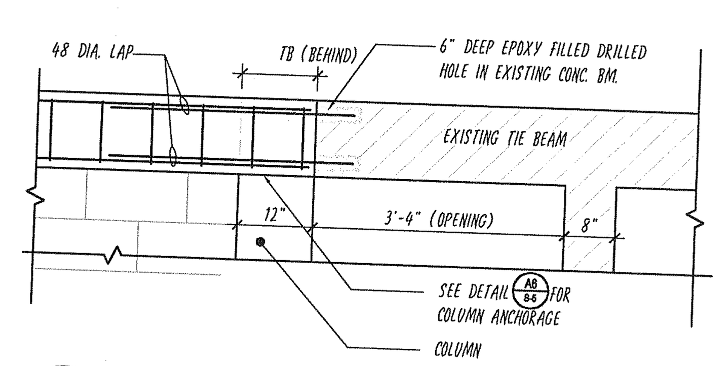

A7 / S-3 NEW TO EXISTING TIE BEAM CONN. DETAIL
SCALE : 1/2" = 1'-0"

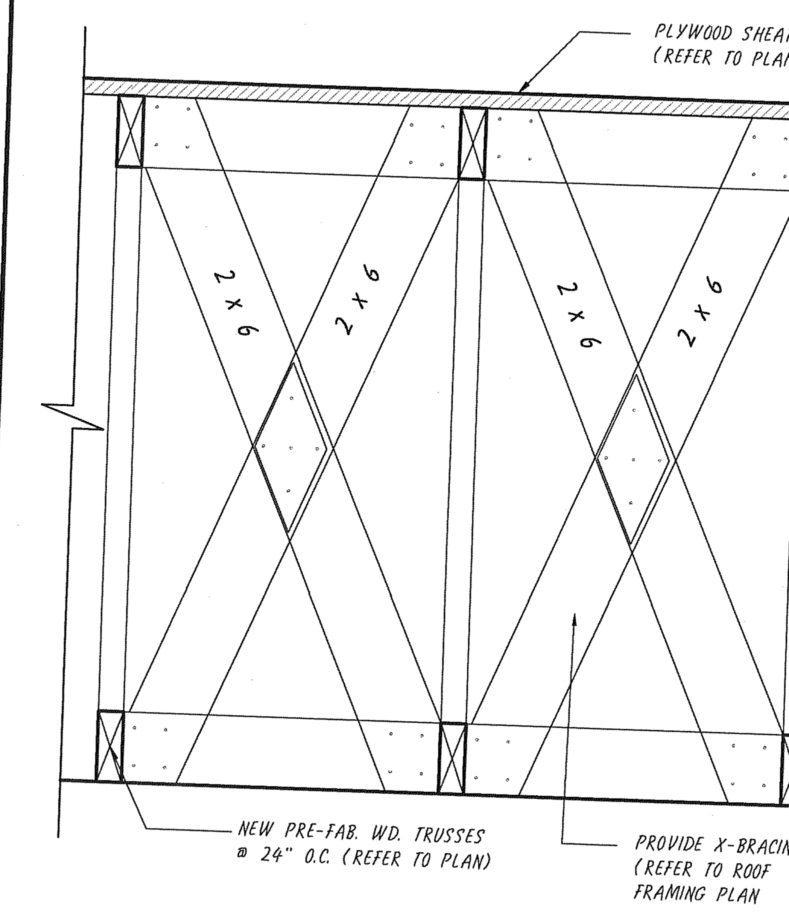

NOTE:
FASTEN 2x WOOD BLOCKING TO TRUSS TOP/BOTT. CHORD W/"USP" JA5G FRAMING ANGLE W/(6)-16d NAILS TO TRUSS CHORDS AND (6)-10dx1½" NAILS TO WOOD BLOCKING.
FASTEN 2x6 X-BRACING TO 2xWD BLOCKING W/(4)-16d NAILS EA. CONNECTION.

A5 / S-3 TYPICAL RIDGE BRACING DETAIL
SCALE: 1" = 1'-0"

ROOF FRAMING NOTES:
1. ALL PRE-FABRICATED WOOD TRUSSES SHALL BE SPACED @ 24" O.C. (MAXIMUM) TRUSS ENGINEER TO DESIGN ADDITIONAL BRACING AS NEEDED. (2"x4" MINIMUM CHORDS)
2. ALL LATERAL BRACING SHALL BE 2x8 W/ 2-16d NAILS @ EACH CONNECTION.
3. ALL ROOFING FASTNERS AND/OR NAILS SHALL BE HOT DIPPED GALVANIZED AND OF SUFFICENT LENGTH TO PENETRATE THROUGH THE ROOFING FELTS AND SHEATHING BY NOT LESS THAN 3/4 INCH.
4. ALL ROOFING ACCESSORIES AND MATERIALS SHALL HAVE MIAMI-DADE COUNTY PRODUCT CONTROL APPROVAL AND MUST BE INSTALLED IN ACCORDANCE WITH THE REQUIREMENTS AND DIRECTIVES OF THE NOTICE OF ACCEPTANCE ISSUED FOR EACH INDIVIDUAL PRODUCT OF THE SYSTEM.
5. ROOF SHEATHING SHALL BE A.P.A. RATED, NOT LESS THAN 5/8" (19/32") EXTERIOR GLUE TYPE PLYWOOD SHEATHING AND SHALL HAVE MANUFACTURER'S PRODUCT STAMP CLEARLY VISIBLE. INSTALL SHEATHING IN ACCORDANCE WITH REQUIREMENTS OF F.B.C. CHAPTER 23. SHEATHING SHALL BE NAILED TO ROOF TRUSSES TO FORM A DIAPHRAGM USING NO. 10d GALV. RING SHANK NAILS (3"x0.135 MIN. SHANK DIA. AND RING OF 0.012 DIA. OR LARGER) AT NOT MORE THAN 6 INCHES AT INTERIOR FIELD, INTERIOR PANEL EDGES AND EXTERIOR PANEL EDGES. PROVIDE NO. 10D NAILS SPACED AT 4 INCHES MAXIMUM AT GABLE ENDS IF APPLICABLE.
6. BLOCKED & UNBLOCKED PLYWOOD DIAPHRAGM SHALL CONSIST OF ⅝" STRUCTURAL GRADE I PLYWOOD CONTINUOUS OVER TWO OR MORE SPANS, FACE GRAIN PERPENDICULAR TO SUPPORTS, FASTENED WITH 10d GALV. RING SHANK 1 NAILS, 1-½" MIN. PENETRATION IN 2" MIN. NOMINAL FRAMING MEMBERS SPACED AT 24" O.C. AT ROOF DIAPHRAGM BOUNDARY PANELS & AT 6" O.C. AT ALL OTHER PLYWOOD PANEL EDGES AND ALONG INTERMEDIATE FRAMING MEMBERS.

ROOF NOTES
"+" : DEAD LOAD PLUS LIVE LOAD GIRDER TRUSS REACTION

"-" : NET WIND UPLIFT GIRDER TRUSS REACTION.

"CB" : 2 X 6 VERTICAL WOOD "CROSS" BRACING CONNECTED TO TRUSSES AT EACH CONTACT POINT W/ 2- 16d NAILS. SEE TRUSS MANUFACTURER SHOP DRAWINGS AND CALCULATIONS FOR ADDITIONAL CHORD AND WEB BRACING.

"HB" : 2 X 6 CONTINUOUS HORIZ. WOOD BOTT. CHORD BRACING CONNECTED TO THE TOP OF EVERY TRUSS BOTTOM CHORD W/ 2- 16d NAILS. MAXIMUM SPACING BETWEEN BRACINGS SHALL BE 10'-0" SEE TRUSS MANUFACTURER SHOP DRAWINGS AND CALCULATIONS FOR ADDITIONAL CHORD AND WEB BRACING.

TRUSS MANUFACTURE TO COORDINATE TRUSS BOTTOM CHORD ELEVATION W/ ARCHITECTURAL DRAWINGS.

ROOF LEGEND:
- COLUMN BELOW
- CONCRETE TB/BEAM
- OPENING BELOW
- EXISTING CONSTRUCTION TO REMAIN
- (1) CONNECTOR TYPE
- DL=718# DEAD LOAD
- LL=798# LIVE LOAD
- UP.L=712# UPLIFT
- ROOF CRICKET AREA. EXTEND TRUSSES TOP CHORD TO FORM FRAMING

TO THE BEST OF MY KNOWLEDGE THESE PLANS CONFORM TO THE STRUCTURAL REQUIREMENTS OF F.B.C. 2010, LATEST REVISIONS, INCLUDING SECTIONS PERTAINING TO H.V.H.Z.
A. JACK MESSULAM, PE
FL P.E. #12326
CONSULTING ENGINEER
TEL: 305-665-5032
5121 ORDUNA DRIVE, CORAL GABLES, FLORIDA 33146

Note
The above drawings, designs, and ideas are the property of Pedro G. Suaréz, R.A. No part thereof shall be copied, disclosed to others, or used in connection with any work other than for the specific project for which they have been prepared without the written consent of Pedro G. Suaréz, R.A.

PEDRO G. SUAREZ, A.I.A
Architecture • Interior Design • Planning
5961 SW 96th Avenue, Miami, Florida 33173, Phone (305) 443-2713, Fax (305) 443-5215
E-MAIL: psuarez@pgsarchitects.com
ID 4763 - AR-13718

Commission No. 1203
Date 05/22/12
Drawn PS
Checked AJM
Revisions
1 ___ By ___
2 ___ By ___
3 ___ By ___
4 ___ By ___
5 ___ By ___

Project Title
RAMOS RESIDENCE
PROPOSED ADDITION
13328 S.W. 112TH COURT
MIAMI, FLORIDA 33176

Sheet No.
S-3
of 5

Miami Dade County Department of Regulatory And Economic Resources
0000830059 - 12/31/2012 12:13:22 PM
S3-09172012.PDF

Examiner	Date Time Stamp	Disp.	Trade	Stamp Name
Jeanne Clarke	12/19/2012 12:22:48 PM	A	STRU	Approved