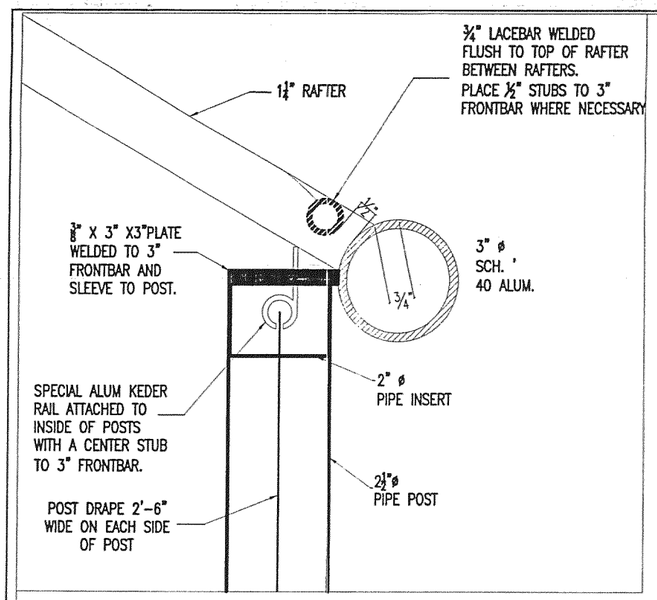

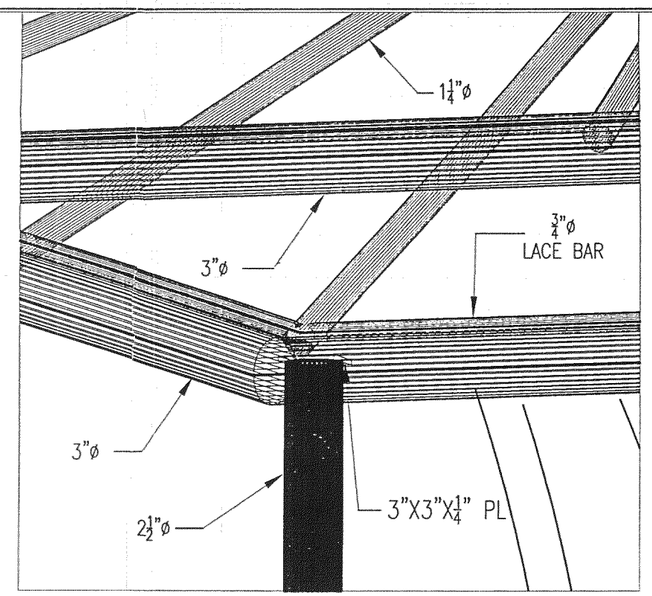

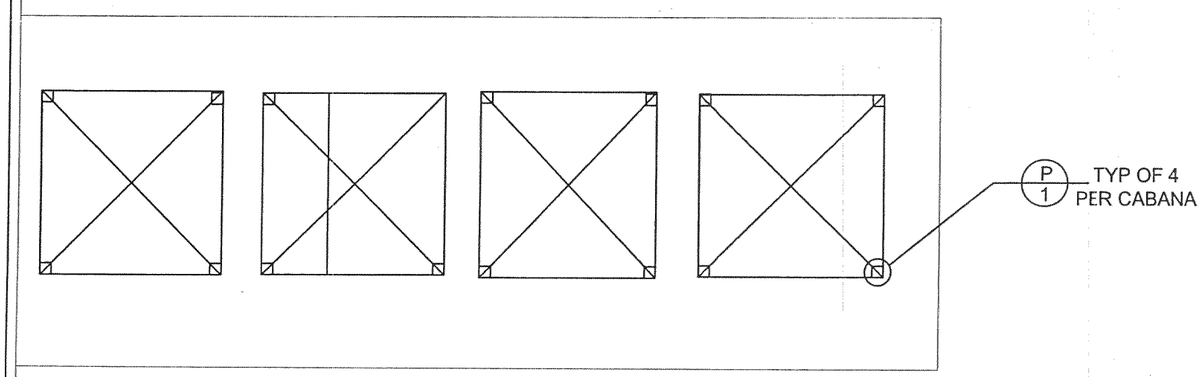

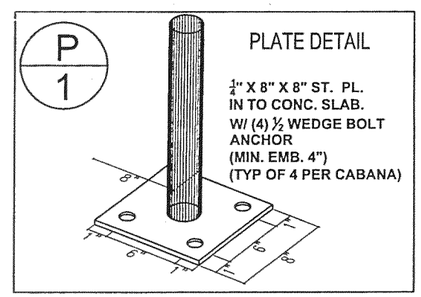

WO:	8845
PROJECT:	LENNAR GARDEN ESTATES CLUBHOUSE
LOCATION:	15080 SW 116 TERR.
CITY:	MIAMI, FL 33196
PROJECT MANAGER:	FS
DRAFTED BY:	ASM
DATE:	08/15/16
REVISION DATE:	REVISION DATE
REVISION DATE:	REVISION DATE
REVISION DATE:	REVISION DATE
REVISION DATE:	REVISION DATE

MIAMI AWNING COMPANY
3905 N.W. 31 AVENUE
MIAMI, FLORIDA 33142
305/576-2029 FAX:305/576-0514
http://www.miamiawning.com
E-mail: sales@miamiawning.com

© 2016 MIAMI BEACH AWNING COMPANY
D.B.A. MIAMI AWNING COMPANY
THOMAS AWNINGS

C.C. # 0000012781

Cesar I. Castillo, P.E.
CONSULTING ENGINEER
13155 SW 134th STREET, SUITE #119
MIAMI, FL 33186
PHONE # (305) 253-9442
FLORIDA P.E. #68447

No. 68447
STATE OF FLORIDA
PROFESSIONAL ENGINEER
SEP 01 2016

SHEET 2 OF 2

Miami Dade County Department of Regulatory And Economic Resources
0001119945 - 9/15/2016 3:47:41 PM
SHEET2-09082016.PDF

Examiner	Date Time Stamp	Disp.	Trade	Stamp Name
Yun S. Joo	9/15/2016 3:26:36 PM	A	STRU	Approved