PLUMBING GENERAL NOTES:

1. THE CONTRACTOR SHALL FURNISH ALL LABOR, MATERIALS AND EQUIPMENT NECESSARY FOR THE INSTALLATION OF A COMPLETE PLUMBING SYSTEM IN ACCORDANCE WITH THESE DRAWINGS, THE FLORIDA BUILDING CODE 2014 AND ADDENDUMS, ALL OTHER APPLICABLE STATE, COUNTY AND LOCAL CODES AND ORDINANCES.
2. THE CONTRACTOR SHALL PAY ALL COSTS OF PERMIT, INSPECTIONS AND ALL OTHER COSTS INCIDENTAL TO THE COMPLETION AND TESTING OF THIS WORK. UPON FINAL ACCEPTANCE, A CERTIFICATE FROM THE LOCAL INSPECTION AUTHORITY SHALL BE FURNISHED TO THE OWNER.
3. ALL MATERIALS AND EQUIPMENTS SHALL BE NEW, OF U.S. MANUFACTURER AND OF GOOD QUALITY OF RESPECTIVE KIND AND GRADE, AND MUST BE FURNISHED SO AS TO PREVENT ANY DELAY IN THE PROGRESS OF THE WORK. ALL WORK THROUGHOUT SHALL BE PERFORMED IN A WORKMANLIKE MANNER BY SUFFICIENT NUMBER OF SKILLED WORKMEN.
4. CONTRACTOR SHALL VISIT THE SITE AND REVIEW ALL PERTINENT UTILITY DRAWINGS TO FAMILIARIZE HIMSELF WITH THE LOCATION OF ALL EXISTING AND/OR PROPOSED UTILITY STUB OUTS, PIPING, INVERT, EQUIPMENT, ETC., AND MAKE DUE ALLOWANCES FOR ANY CONDITION AFFECTING HIS WORK.
5. THE LOCATION OF ALL ITEMS SHOWN ON THE DRAWINGS ARE NOT DEFINITELY FIXED BY DIMENSIONS ARE APPROXIMATE ONLY.THE EXACT LOCATIONS NECESSARY TO SECURE THE BEST CONDITIONS AND RESULTS MUST BE DETERMINED BY THE CONTRACTOR AT THE PROJECT AND SHALL BE APPROVAL BEFORE ACTUAL INSTALLATION.
6. ALL PLUMBING LINES SHOWN ARE IN THE APPROXIMATE LOCATION ONLY. FINAL PLUMBING LINES EXACT LOCATION WILL BE DETERMINE AT PROJECT SITE IN RESPONSE TO FIELD CONDITIONS.
7. ALL CUTTING REQUIRED TO PERFORM THE WORK UNDER THIS CONTRACT WILL BE DONE BY MECHANICAL CONTRACTOR. ANY CUTTING OF STRUCTURE MUST BE APPROVED BY STRUCTURAL ENGINEER PRIOR TO EXECUTION OF WORK.
8. GENERAL CONTRACTOR TO COORDINATE LOCATIONS AND SIZES OF ALL ACCESS DOORS WITH ARCHITECTURAL DRAWINGS.
9. INSTALL CONCRETE SUPPORT AT BASE (UNDERGROUND CONNECTION) OF SOIL STACK, RAIN LEADER, ETC.
10. ALL SANITARY DRAINAGE PIPING AND FITTINGS SHALL BE SCH. 40 PVC PIPE. EXCEPT WHEN IN PLENUM SPACES ALL PIPING TO COMPLY WITH TABLE 702.1 AND 702.2 FBC (PLUMBING).
11. ALL ABOVE GROUND WATER PIPING SHALL BE COPPER TYPE "L" PIPING TO COMPLY WITH TABLE 605.5 FBC (PLUMBING).
12. ALL HOT WATER PRESSURE AND TEMPERATURE RELIEF PIPING SHALL BE COPPER TYPE "K" (ASTM B-306).
13. ALL PLUMBING FIXTURES SHALL BE PROVIDED WITH ALL NECESSARY ACCESSORIES SUCH AS STOP VALVES, "P" TRAPS, SUPPORTS, P & T VALVES, ETC., AS REQUIRED. ALL EXPOSED PIPING AT FIXTURES AND EQUIPMENT SHALL BE CHROME PLATED BRASS PIPE OR TUBE. PROVIDE SHUT OFF VALVES AND UNIONS TO ALL FIXTURES, ETC., REQUIRING WATER SUPPLY. PROVIDE DIELECTRIC COUPLINGS AS REQUIRED. FOR ALL COPPER PIPING CONTRACTOR MUST USE 95/5 SOLDER. PROVIDE WATER HAMMER ARRESTORS TO EACH FIXTURE AS REQUIRED.
14. PROVIDE CLEANOUTS (WITH CHROME PLATED WALL OR FLOOR ACCESS FRAMES AND COVERS AS REQUIRED) AT THE BASE OF ALL WASTE AND/OR VENT STACKS. PROVIDE PITCH PANS & LEAD FLASHING FOR ALL SANITARY SYSTEM VENTS.
15. ALL HORIZONTAL WASTE PIPING 3" AND LARGER SHALL BE SLOPPED AT 1/8 PER FOOT.
16. ALL 2" HORIZONTAL WASTE PIPING SHALL BE SLOPPED AT 1/4 PER FOOT.
17. ALL UNDERGROUND PIPING IS TO BE HUNG FROM THE SLAB.
18. ALL POTABLE WATER USE FIXTURES SHALL COMPLY WITH "NO-LEAD" REQUIREMENTS.
19. ALL FIXTURES SUPPLIES AND STOPS SHALL BE CHROME PLATED (C.P.)
20. ALL EXPOSED FIXTURE "P-TRAPS" SHALL BE MINIMUM 17 GAL. & CHROME PLATED CAST BRASS OR 316 STAINLESS STEEL.
21. PROVIDE ANTI-SCALDING VALVE @ 110 OF ON ALL TUBS AND SHOWERS, OF THE THERMOSTATIC AND PRESSURE BALANCED TYPE (ASSE 1016).

PLUMBING FIXTURE CONNECTION SCHEDULE

MARK	DESCRIPTION	WASTE	VENT	C.W	H.W	REMARKS/SPECS
WC	WATER CLOSET	3"	2"	1/2"	–	FLOOR MOUNTED, TANK TYPE, 1.28 GPF
LAV	LAVATORY	2"	2"	1/2"	–	COUNTER TOP, 1.5 GPM
SH	SHOWER	2"	2"	1/2"	1/2"	ANTI-SCALDING VALVE, 1.5 GPM HEAD
2CSK	TWO COMPARTMENT SINK	2"	2"	1/2"	1/2"	WALL MTD, 1.5 GPM.
DW	DISHWASHER	3/4"	–	1/2"	1/2"	1-1/2" INDIRECT WASTE LINE
R	REFRIGERATOR	–	–	1/2"	–	WALL MOUNTED BOX WITH VALVE AND FLEX CONNECTION
WM	WASHER MACHINE	2"	2"	1/2"	1/2"	WALL MTD. RECESSED BOX WITH 2" TRAP, VALVED WATER CONNECTION
BT	BATHTUB	2"	2"	1/2"	1/2"	ANTI-SCALDING VALVE, 1.5 GPM HEAD
LSK	LAUNDRY SINK	2"	2"	1/2"	1/2"	WALL MOUNTED 1.5 GPM
IM	ICE MACHINE	–	–	1/2"	–	UNDERCOUNTER WALL MOUNTED WITH FLEX VALVED CONNECTION

1. MAXIMUM FLOW RATES AND CONSUMPTION OF PLUMBING FIXTURES AS PER MIAMI-DADE ORDINANCE 8-14 (CODE 8-31). AS PER MIAMI DADE COUNTY AMMENDMENT TO FBC P604.4
2. FAUCETS AND FIXTURE FITTINGS WITH HOSE-CONNECTED OUTLETS SHALL CONFORM TO ASME A112.18.3M AS PER FPC 424.4,
3. ALL FIXTURES SHALL COMPLY WITH STANDARDS AS PER FBC P406 THROUGH 421.

WATER HAMMER ARRESTER SPECS.

P.D.I. UNITS	F.U. RATING	CATALOG NO.	MANUFACTURER	STANDARDS
A	1 – 11	5005	J. R. SMITH	ASSE 1010

STEAM GENERATOR:
MANUFACTURER: MR STEAM, MODEL: MS SUPER 2E C1, 208V-1P, 12KW, 58AMPS. STAINLESS STEEL TANK, BUILT-IN LOW VOLTAGE 24V CONTROL, ASME SAFETY VALVE, 60 MINUTE ELECTRONIC COUNTDOWN SHUTDOWN WITH 75 MINUTE LIMITING SAFETY BACK UP. STEAM OUTLET (1/2" NPT). DRAIN (1/2" NPT), WATER SUPPLY (3/8" NPT), SAFETY VALVE (3/4" NPT), STEAM HEAD (1/2" NPT)

INSTANT WATER HEATER

IEWH-1. (RELOCATED) AMERICAN HEAT, MODEL: ADK-1, 208V-1P, 54A-11.8KW 0.4GPM, Δ 23F, 98%EF, UL 499.

IEWH-2. (RELOCATED) TITAN, MODEL: N-120, 208V-1P, 54A-11.8KW 0.4GPM, Δ 23F, 98%EF, UL 499.

IEWH-3. (EXISTING) AMERICAN HEAT, MODEL: ADK-1, 208V-1P, 54A-11.8KW 0.4GPM, Δ 23F, 98%EF, UL 499

SANITARY LINES SLOPE:
LESS THAN 3": 1/4"/LF
3" AND GREATER: 1/8"/LF

SP-1: SINK PUMP SYSTEM BELOW COUNTER, MANUFACTURER: LIBERTY, MODEL: 404, 5GAL, 15GPM@15'HEAD, 1/3HP, 115V-1P, 5AMPS, DISCHARGE 2", AUTOMATIC.

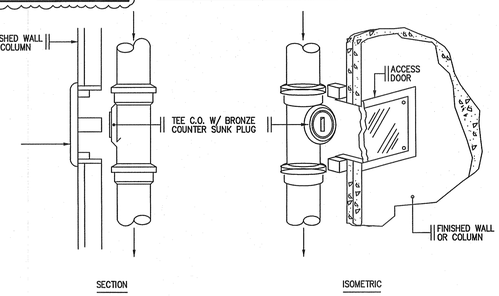

TEE CLEANOUT DETAIL
NTS

PLUMBING LEGEND

LEGEND	DESCRIPTION
	EXISTING COLD WATER LINE
	EXISTING HOT WATER LINE
	COLD WATER LINE
	HOT WATER LINE
	GATE VALVE
P&T	P & T RELIEF LINE
	BACKFLOW
	SANITARY LINE
	VENT LINE
	CONDENSTATE LINE
FCO	FLOOR CLEAN-OUT
CO	CLEAN-OUT
HB W/VB	3/4" H.B. WITH SHUT-OFF VALVE AND VACUUM BREAKER
	POINT OF CONNECTION TO EXISTING LINE
CW	COLD WATER
HW	HOT WATER
V	VENT
VTR	VENT THRU ROOF
UG	UNDERGROUND
A.A.V.	AIR ADMITTANCE VALVE
IEWH	INSTANT ELECTRIC WATER HEATER
IWL	INDIRECT WASTE LINE
B/C	BELOW COUNTER
HP	HEAT PUMP
DN	DOWN
OH	OVER HEAD
E	EXISTING
RL	RELOCATED
RP	REPLACED
SP	SINK PUMP SYSTEM

PLUMBING SCOPE OF WORK AND NOTES:

1. SCOPE OF WORK INTERIOR REMODELING OF THIS APARTMENT AS SHOWN ON PLANS.
2. EXISTING PLUMBING BUILDING RISERS TO REMAIN NOT AFFECTED UNDER THIS WORK.
3. PROVIDE HAMMER WATER ARRESTORS IN QUICK-CLOSING VALVE FIXTURE CONNECTIONS AS PER FPC 604.9.
4. SANITARY LINES TO BE RUN WITHIN WALLS. NO PENETRATION SHALL BE DONE TO THE SLAB TO AVOID INTRUSION TO FLOOR BELOW
5. PROVIDE VALVES TO ALL WATER BRANCHES.
6. BEFORE COMMENCING WORK CONTRACTOR SHALL FIELD COORDINATE EXACT POINT OF CONNECTION AND ANY ADDITIONAL OWNER REQUIREMENTS. PROVIDE VALVING AND ALL COMPONENTS AS REQUIRED FOR A COMPLETE OPERATIONAL SYSTEM.
7. CONTRACTOR TO VERIFY FINAL FIXTURE SELECTION WITH OWNER BEFORE COMMENCING WORK.
8. ALL RUN WATER LINES WITHIN CEILING AND WALLS.
9. WORK SHALL COMPLY WITH FBC 2014 AND ADDENDUMS.

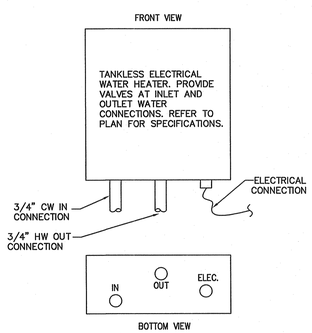

INSTANT ELECTRICAL WATER HEATER
NTS

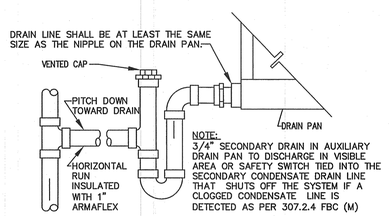

AHU CONDENSATE DRAIN CONNECTION
NTS

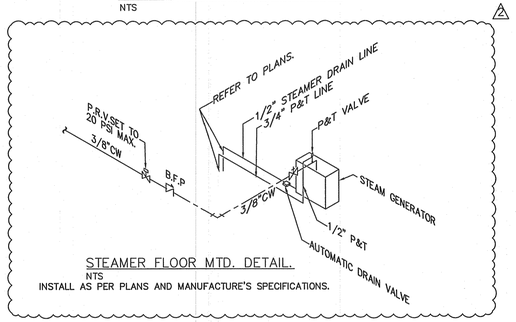

STEAMER FLOOR MTD. DETAIL.
NTS
INSTALL AS PER PLANS AND MANUFACTURE'S SPECIFICATIONS.

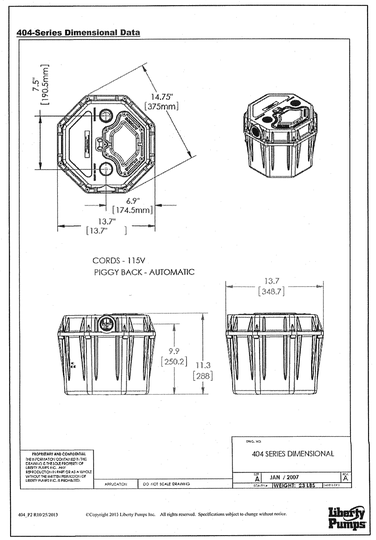

SINK PUMP DETAIL
NTS

atelier space planning
CERTIFIED GENERAL CONTRACTOR
9460 NW 68 st. # 104 Doral, FL. 33178
305.954.8842 - tel/ fax 305.715.7150
acatelier@comcast.net

PROJECT NUMBER (1125) 2016

OWNER
REICH RESIDENCE

ADDRESS
7872 FISHER ISLAND DRIVE
FISHER ISLAND FL, 33109

DRAWN
S.C

PJV ENGINEERING, INC.
Mechanical & Electrical Engineers
email: info@pjveng.com
www.pjveng.com
Tel: (305) 742-2112
C.A.# 26987

DATE
05/ 01/ 2016

SCALE
SCALE: AS SHOWN

SHEET DESCRIPTION
PLUMBING NOTES AND DETAILS

REVISIONS
1 BLDG. DEPT 04/11/16
2 FIELD REV 06/29/16

PABLO J. VITERI
PE# 59535
JUL 01 2016

SEAL

SHEET NUMBER
P-0

Miami Dade County Department of Regulatory And Economic Resources
0001123882 - 7/13/2016 8:14:29 AM
P-0-07052016.pdf
Examiner Date Time Stamp Disp. Trade Stamp Name
Wilfredo Urquiaga 7/6/2016 5:07:49 PM A PLUM Approved