11

MIAMI-DADE COUNTY

DEPARTMENT OF REGULATORY AND ECONOMIC RESOURCES (RER)
BOARD AND CODE ADMINISTRATION DIVISION

MIAMI-DADE COUNTY
PRODUCT CONTROL SECTION
11805 SW 26 Street, Room 208
T (786) 315-2590 F (786) 315-2599
www.miamidade.gov/economy

NOTICE OF ACCEPTANCE (NOA)

Sunshine Windows Manufacturing, Inc.
1745 W. 33rd Place
Hialeah, FL 33012

SCOPE:

This NOA is being issued under the applicable rules and regulations governing the use of construction materials. The documentation submitted has been reviewed and accepted by Miami–Dade County RER–Product Control Section to be used in Miami–Dade County and other areas where allowed by the Authority Having Jurisdiction (AHJ).

This NOA shall not be valid after the expiration date stated below. The Miami–Dade County Product Control Section (In Miami–Dade County) and/ or the AHJ (in areas other than Miami–Dade County) reserve the right to have this product or material tested for quality assurance purposes. If this product or material fails to perform in the accepted manner, the manufacturer will incur the expense of such testing and the AHJ may immediately revoke, modify, or suspend the use of such product or material within their jurisdiction. RER reserves the right to revoke this acceptance, if it is determined by Miami–Dade County Product Control Section that this product or material fails to meet the requirements of the applicable building code.

This product is approved as described herein, and has been designed to comply with the Florida Building Code, including the High Velocity Hurricane Zone.

DESCRIPTION: Series "1650 (XO)" Aluminum Horizontal Sliding Window – L.M.I.

APPROVAL DOCUMENT: Drawing No. **HS08–01**, titled "Series 1650 Aluminum Horizontal Sliding Window (XO) Impact Resistant Glass", sheets 01 through 07 of 07, dated 03/14/08, with the latest revision "2" dated 11/18/14, prepared by manufacturer, dated 04/25/15, signed and sealed by Francisco Hernandez, P. E., bearing the Miami–Dade County Product Control Section Revision stamp with the Notice of Acceptance number and Expiration date by the Miami–Dade County Product Control Section.

MISSILE IMPACT RATING: Large and Small Missile Impact Resistant

LABELING: Each unit shall bear a permanent label with the manufacturer's name or logo, city, state, series, and following statement: "Miami–Dade County Product Control Approved", unless otherwise noted herein.

RENEWAL of this NOA shall be considered after a renewal application has been filed and there has been no change in the applicable building code negatively affecting the performance of this product.

TERMINATION of this NOA will occur after the expiration date or if there has been a revision or change in the materials, use, and/ or manufacture of the product or process. Misuse of this NOA as an endorsement of any product, for sales, advertising or any other purposes shall automatically terminate this NOA. Failure to comply with any section of this NOA shall be cause for termination and removal of NOA.

ADVERTISEMENT: The NOA number preceded by the words Miami–Dade County, Florida, and followed by the expiration date may be displayed in advertising literature. If any portion of the NOA is displayed, then it shall be done in its entirety.

INSPECTION: A copy of this entire NOA shall be provided to the user by the manufacturer or its distributors and shall be available for inspection at the job site at the request of the Building Official.

This NOA revises NOA No. 12–0329.06 and consists of this page and evidence pages E–1 and E–2 and as well as approval document mentioned above.

The submitted documentation was reviewed by **Jaime D. Gascon, P. E.**

Miami Dade County Department of Regulatory And Economic Resources - Job Copy
0001117799 - 9/19/2017 1:56:22 PM
NOA04-081552017.PDF
Examiner Date Time Stamp Dign Trade Stamp Name
Carlos Labiste 8/31/2017 7:54:19 AM STRU Approved

MIAMI-DADE COUNTY APPROVED

J. Gascon 8/6/15

Reviewed 4/27/15

NOA No. 14–1204.11
Expiration Date: April 10, 2018
Approval Date: May 14, 2015
Page 1

Sunshine Windows Manufacturing, Inc.

NOTICE OF ACCEPTANCE: EVIDENCE SUBMITTED

A. DRAWINGS

1. Manufacturer's die drawings and sections.
   (Submitted under previous NOA No. 08–0107.08)
2. Drawing No. **HS08–01**, titled "Series 1650 Aluminum Horizontal Sliding Window (XO) Impact Resistant Glass", sheets 01 through 07 of 07, dated 03/14/08, with the latest revision "**2**" dated 11/18/14, prepared by manufacturer, dated 04/25/15, signed and sealed by Francisco Hernandez, P. E.

B. TESTS

1. Test reports on: 1) Air Infiltration Test, per FBC, TAS 202–94
   2) Uniform Static Air Pressure Test, Loading per FBC, TAS 202–94
   3) Water Resistance Test, per FBC, TAS 202–94
   4) Large Missile Impact Test per FBC, TAS 201–94.
   5) Cyclic Wind Pressure Loading per FBC, TAS 203–94
   6) Forced Entry Test, per FBC 2411.3.2.1, and TAS 202–94

   along with marked–up drawings and installation diagram of an aluminum horizontal sliding window, prepared by Fenestration Testing Laboratory, Inc., Test Reports No.'s **FTL–5331**, dated 09/18/07 and **FTL–5015**, dated 07/27/07, signed and sealed by Carlos S. Rionda, P. E.
   (Submitted under previous NOA No. 08–0107.08)

C. CALCULATIONS

1. Anchor verification calculations and structural analysis, complying with **FBC 5th Edition (2014)**, prepared by Sunshine Windows Manufacturing, Inc., dated 11/09/14, signed and sealed by Francisco Hernandez, P. E.
2. **Glazing complies with ASTM E1300–04/ 09**

D. QUALITY ASSURANCE

1. Miami–Dade Department of Regulatory and Economic Resources (RER).

E. MATERIAL CERTIFICATIONS

1. Notice of Acceptance No. **14–0916.10** issued to **Kuraray America, Inc.** for their **"Kuraray PVB Glass Interlayer"**, expiring on 12/11/16.

F. STATEMENTS

1. Statement letter of conformance to, of complying with **FBC 5th Edition (2014)** and of no financial interest, dated 11/10/14, signed and sealed by Francisco Hernandez, P. E.
2. Statement letter of conformance to, of complying with **FBC–2010** and of no financial interest, dated 03/12/12, signed and sealed by Francisco Hernandez, P. E.
   (Submitted under previous NOA No. 13–0320.06)

Miami Dade County Department of Regulatory And Economic Resources - Job Copy
0001117799 - 9/19/2017 1:56:22 PM
NOA04-081552017.PDF

Examiner	Date Time Stamp	Disp.	Trade	Stamp Name
Carlos Labiste	8/31/2017 7:54:19 AM	A	SHRU	Approved

Jaime D. Gascon, P. E.
Product Control Section Supervisor
NOA No. 14–1204.11
Expiration Date: April 10, 2018
Approval Date: May 14, 2015

Sunshine Windows Manufacturing, Inc.

NOTICE OF ACCEPTANCE: EVIDENCE SUBMITTED

F. STATEMENTS

3. Laboratory compliance letter for Test Reports No.'s **FTL–5331**, dated 09/18/07 and **FTL–5015**, dated 07/27/07, issued by Fenestration Testing Laboratory, Inc., signed and sealed by Carlos S. Rionda, P. E.
(Submitted under previous NOA No. 08–0107.08)

G. OTHERS

1. Notice of Acceptance No. **12–0320.06**, issued to Sunshine Windows Manufacturing, Inc. for their Series "1650 Aluminum Horizontal Sliding Window – L.M.I.", approved on 05/17/12 and expiring on 04/10/18.

Miami Dade County Department of Regulatory And Economic Resources - Job Copy
0001117799 - 9/19/2017 1:56:22 PM
NOA04-081552017.PDF

Examiner	Date Time Stamp	Disp.	Trade	Stamp Name
Carlos Labiste	8/31/2017 7:54:19 AM	A	STRU	Approved

Jaime D. Gascon, P. E.
Product Control Section Supervisor
NOA No. 14–1204.11
Expiration Date: April 10, 2018
Approval Date: May 14, 2015

36

DESIGN PRESSURES CHART - PSF

HEAT STRENGTHENED LAMINATED IMPACT RESISTANT GLASS

	WINDOW DIMENSION		ANCHOR SCHEDULE		HURRICANE PROCTECTION IS NOT REQUIRED			
					1 3/4" SILL		3" SILL	
	WIDTH	HEIGHT	PER HEAD & SILL	PER JAMB	EXT.	INT.	EXT.	INT.
STANDARD SIZES	26 1/2"	26"	4	3	53.33	120.00	80.00	120.00
	37"		5		53.33	120.00	80.00	120.00
	53 1/8"		6		53.33	119.30	80.00	119.3
	74"		8		53.33	90.0	80.00	90.00
	26 1/2"	38 3/8"	4	5	53.33	120.0	80.00	120.00
	37"		5		53.33	120.0	80.00	120.00
	53 1/8"		6		53.33	95.50	80.00	95.50
	74"		8		53.33	78.90	78.90	78.90
	37"	50 5/8"	5	6	53.33	104.70	80.00	104.70
	53 1/8"		6		53.33	88.40	80.00	88.40
	74"		8		53.33	67.30	67.30	67.30
	37"	63"	5	7	53.33	88.20	80.00	88.20
	53 1/8"		6		53.33	75.00	75.00	75.00
	74"		8		53.33	62.00	62.00	62.00
MODULAR SIZES	24"	24"	3	3	53.33	120.0	80.00	120.0
	36"		4		53.33	120.0	80.00	120.0
	48"		6		53.33	120.0	80.00	120.0
	60"		7		53.33	120.00	80.00	120.0
	72"		8		53.33	90.00	80.00	90.00
	24"	36"	3	4	53.33	120.00	80.00	120.0
	36"		4		53.33	120.00	80.00	120.0
	48"		6		53.33	120.00	80.00	120.0
	60"		7		53.33	99.90	80.00	99.90
	72"		8		53.33	88.60	80.00	88.60
	36"	48"	4	6	53.33	100.40	80.00	100.40
	48"		6		53.33	93.90	80.00	93.90
	60"		7		53.33	87.00	80.00	87.00
	72"		8		53.33	74.30	74.30	74.30
	36"	60"	4	7	53.33	90.00	80.00	90.00
	48"		6		53.33	87.00	80.0	87.00
	60"		7		53.33	83.10	80.0	83.10
	72"		8		53.33	67.80	67.80	67.80

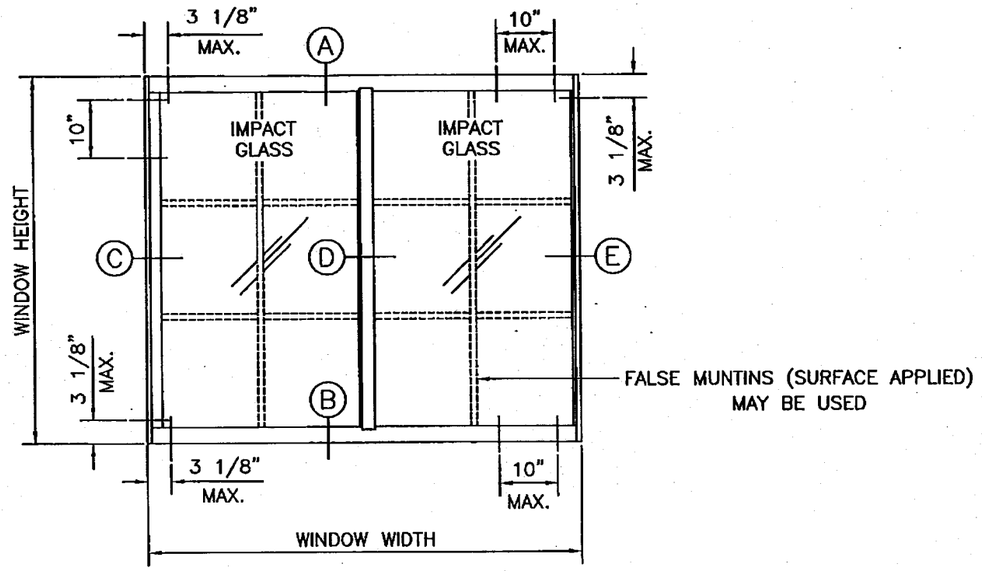

TYPICAL ELEVATION (XO)

GENERAL NOTES:

1.– THIS PRODUCT MEETS THE REQUIREMENTS OF FBC 5TH EDITION (2014).
2.– CONFIGURATIONS OX AND XO.
3.– SHUTTERS ARE NOT REQUIRED.
4.– FOR NUMBER OF ANCHORS FOR EACH UNIT SIZE REFER TO DESIGN PRESSURES CHART.
5.– FOR ANCHOR TYPE AND SPACING REFER TO TYPICAL ELEVATIONS AND SECTIONS ON SHEET 5 THRU 7.
6.– CONCRETE / MASONRY STRUCTURE FOR UNIT ATTACHMENT SHALL COMPLY WITH THE FOLLOWING REQUIREMENTS:
  – CONCRETE STRENGTH Fc'28 = 3000 PSI MIN.
  – CMU AS PER ASTM C90. CMU MUST BE 8–INCH THICK, NORMAL WEIGHT BLOCKS WITH A MINIMUM COMPRESSIVE STRENGTH OF 1.9 KSI.
  – FILLED CMU Fm' = 2000 PSI MIN.
7.– USE NON–SHRINK, NON–METALIC HYDRAULIC CEMENT GROUT PER ASTM C1107/C1107M STANDARD SPECIFICATION FOR PACKAGED DRY.
8.– WOOD HOST STRUCTURE SHALL BE "SOUTHERN YELLOW PINE" G= 0.55 OR GREATER DENSITY.
9.– STEEL HOST STRUCTURE SHALL NOT BE LESS THAN 18 GAUGE. STEEL SHALL BE Fy = 36 KSI MIN.
10.– THE THICKNESS OF THE ALUMINUM HOST STRUCTURE SHALL NOT BE LESS THAN 1/8". ALUMINUM SHALL BE 6063–T6.
11.– 1X OR 2X WOOD BUCKS NOT INCLUDED IN THE SCOPE OF THIS PRODUCT APPROVAL SHALL BE PROPERLY ATTACHED TO SUSTAIN AND TRANSFER THE LOADS IMPOSED BY THE GLAZING SYSTEM TO THE STRUCTURE AND SHALL BE APPROVED BY THE BUILDING OFFICIAL PRIOR TO DOOR INSTALLATION.
12.– ALUMINUM IN CONTACT WITH DISSIMILAR MATERIALS SHALL BE PROTECTED (BY OTHERS) AS SPECIFIED IN FBC 5TH EDITION (2014).

GLASS:

0.340" TOTAL LAMINATED GLASS USING TWO LITES OF 0.125" HEAT STRENGTHENED GLASS WITH A 0.090" INTERLAYER FILM DUPONT BUTACITE PVB, BETWEEN THE TWO LITES OF GLASS. LAMINATED BY TECNOGLASS OR SIMILAR.

PRODUCT REVISED
as complying with the Florida
Building Code
Acceptance No 14-1204.11
Expiration Date 04/10/2018
By
Miami Dade Product Control

11-18-14
FRANCISCO HERNANDEZ
FLORIDA PE # 51393

Sunshine Windows Manufacturing, Inc.
1745 W. 33rd Place
Hialeah, Florida 33012
Ph: (305)364–9952
Fax:(305)828–5118

SERIES 1650 ALUMINUM
HORIZONTAL SLIDING WINDOW (XO)
IMPACT RESISTANT GLASS

No	DATE	REVISION
1	03–05–12	UPDATED FOR 2010 FBC
2	11–18–14	REVISION IN COMPLIANCE WITH FBC 5TH EDITION (2014)

DRAWING No. HS08–01
DATE: 03–14–08
SCALE: 1/2"=1"
SHEET 1 OF 7

Miami Dade County Department of Regulatory And Economic Resources - Job Copy
0001117799 - 9/19/2017 1:56:22 PM
NOA04-081552017.PDF
Examiner Date/Time Stamp Disp. Trade Stamp Name
Carlos Labiste 8/31/2017 7:54:19 AM A STRU Approved

DESIGN PRESSURES CHART - PSF								
HEAT STRENGTHENED LAMINATED IMPACT RESISTANT GLASS								
	WINDOW DIMENSION		ANCHOR SCHEDULE		HURRICANE PROCTECTION IS NOT REQUIRED			
					1 3/4" SILL		3" SILL	
	WIDTH	HEIGHT	PER HEAD & SILL	PER JAMB	EXT.	INT.	EXT.	INT.
SIZES – STANDARD	74"	38 3/8"	11	6	53.33	90.00	80.00	90.00
	74"	50 5/8"	11	8	53.33	90.00	80.00	90.00
	37"	63"	6	9	53.33	90.00	80.00	90.00
	53 1/8"		8		53.33	90.00	80.00	90.00
	74"		11		53.33	85.20	80.00	85.20
SIZES – MODULAR	72"	48"	11	7	53.33	90.00	80.00	90.00
	48"	60"	7	9	53.33	90.00	80.00	90.00
	60"		9		53.33	90.00	80.00	90.00
	72"		11		53.33	90.00	80.00	90.00

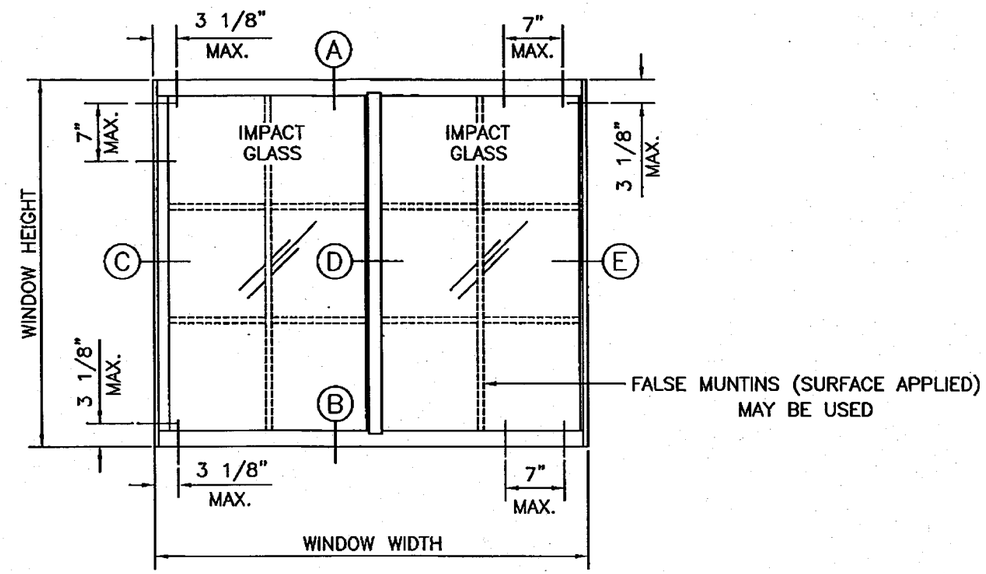

TYPICAL ELEVATION (XO)

GENERAL NOTES:

1.– THIS PRODUCT MEETS THE REQUIREMENTS OF FBC 5TH EDITION (2014).
2.– CONFIGURATIONS OX AND XO.
3.– SHUTTERS ARE NOT REQUIRED.
4.– FOR NUMBER OF ANCHORS FOR EACH UNIT SIZE REFER TO DESIGN PRESSURES CHART.
5.– FOR ANCHOR TYPE AND SPACING REFER TO TYPICAL ELEVATIONS AND SECTIONS ON SHEET 5 THRU 7.
6.– CONCRETE / MASONRY STRUCTURE FOR UNIT ATTACHMENT SHALL COMPLY WITH THE FOLLOWING REQUIREMENTS:
   – CONCRETE STRENGTH Fc'28 = 3000 PSI MIN.
   – CMU AS PER ASTM C90. CMU MUST BE 8–INCH THICK, NORMAL WEIGHT BLOCKS WITH A MINIMUM COMPRESSIVE STRENGTH OF 1.9 KSI.
   – FILLED CMU Fm' = 2000 PSI MIN.
7.– USE NON–SHRINK, NON–METALIC HYDRAULIC CEMENT GROUT PER ASTM C1107/C1107M STANDARD SPECIFICATION FOR PACKAGED DRY.
8.– WOOD HOST STRUCTURE SHALL BE "SOUTHERN YELLOW PINE" G= 0.55 OR GREATER DENSITY.
9.– STEEL HOST STRUCTURE SHALL NOT BE LESS THAN 18 GAUGE. STEEL SHALL BE Fy = 36 KSI MIN.
10.– THE THICKNESS OF THE ALUMINUM HOST STRUCTURE SHALL NOT BE LESS THAN 1/8". ALUMINUM SHALL BE 6063–T6.
11.– 1X OR 2X WOOD BUCKS NOT INCLUDED IN THE SCOPE OF THIS PRODUCT APPROVAL SHALL BE PROPERLY ATTACHED TO SUSTAIN AND TRANSFER THE LOADS IMPOSED BY THE GLAZING SYSTEM TO THE STRUCTURE AND SHALL BE APPROVED BY THE BUILDING OFFICIAL PRIOR TO DOOR INSTALLATION.
12.– ALUMINUM IN CONTACT WITH DISSIMILAR MATERIALS SHALL BE PROTECTED (BY OTHERS) AS SPECIFIED IN FBC 5TH EDITION (2014).

GLASS:

0.340" THICK LAMINATED GLASS USING TWO LITES OF 0.125" HEAT STRENGTHENED GLASS WITH A 0.090" INTERLAYER FILM DUPONT BUTACITE PVB, BETWEEN THE TWO LITES OF GLASS. LAMINATED BY TECNOGLASS OR SIMILAR.

Miami Dade County Department of Regulatory And Economic Resources Job Copy
0001117799 - 9/19/2017 1:56:22 PM
NOA04-081552017.PDF

Examiner	Date Time Stamp	Disp.	Trade	Stamp Name
Carlos Labiste	8/31/2017 7:54:19 AM	A	STRU	Approved

PRODUCT REVISED
as complying with the Florida Building Code
Acceptance No 14-1204.11
Expiration Date 04/10/2018
By
Miami Dade Product Control

11-18-14

FRANCISCO HERNANDEZ
FLORIDA PE # 51393

Sunshine Windows Manufacturing, Inc.
1745 W. 33rd Place
Hialeah, Florida 33012
Ph: (305)364–9952
Fax:(305)828–5118

SERIES 1650 ALUMINUM HORIZONTAL SLIDING WINDOW (XO) IMPACT RESISTANT GLASS

No	DATE	REVISION
1	03–05–12	UPDATED FOR 2010 FBC
2	11–18–14	REVISION IN COMPLIANCE WITH FBC 5TH EDITION (2014)

DRAWING No. HS08–01
DATE: 03–14–08
SCALE: 1/2"=1"

37

38

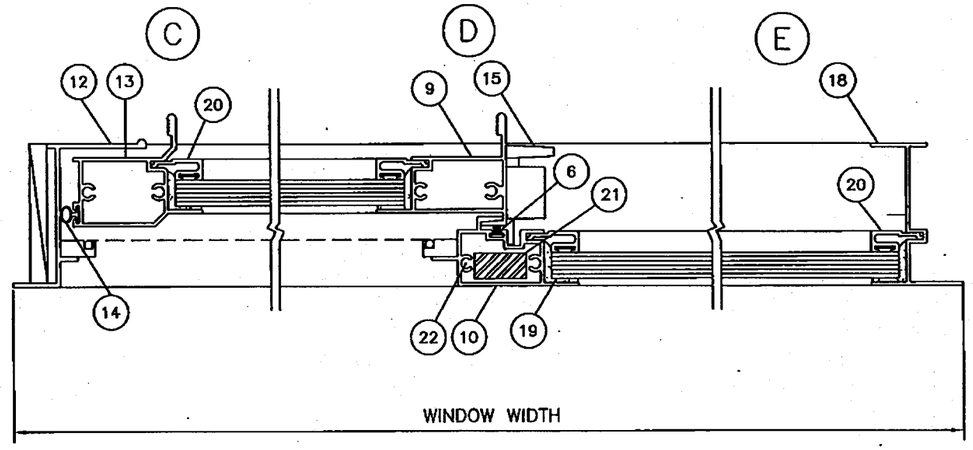

HORIZONTAL SECTION

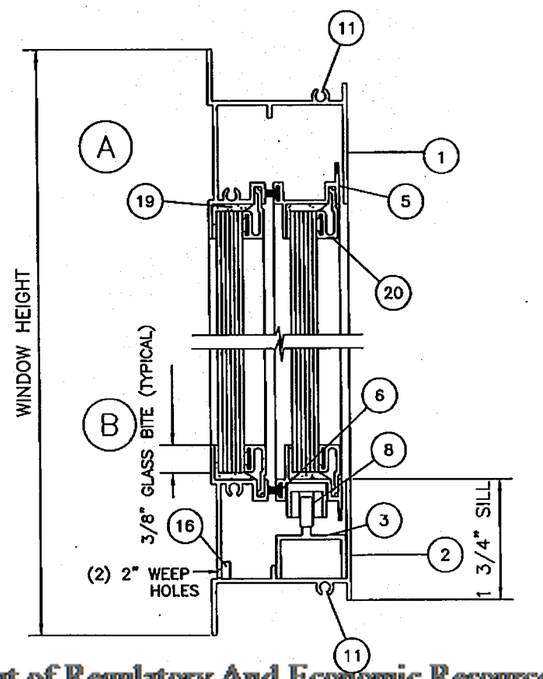

VERTICAL SECTION

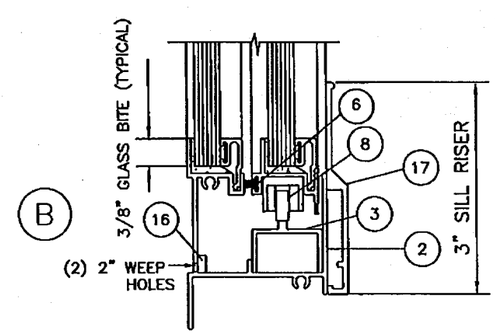

VERTICAL SECTION
WITH SILL RISER

Miami Dade County Department of Regulatory And Economic Resources - Job Copy
0001117799 - 9/19/2017 1:56:22 PM
NOA04-0815.52017.PDF

Examiner	Date Time Stamp	Disp.	Trade	Stamp Name
Carlos Labiste	8/31/2017 7:54:19 AM	A	STRU	Approved

PRODUCT REVISED
as complying with the Florida
Building Code
Acceptance No 14-1204.11
Expiration Date 04/16/2018
By
Miami Dade Product Control

4-25-15

FRANCISCO HERNANDEZ
FLORIDA PE # 51393

Sunshine Windows
Manufacturing, Inc.
1745 W. 33rd Place
Hialeah, Florida 33012
Ph: (305)364-9952
Fax:(305)826-5118

SERIES 1650 ALUMINUM
HORIZONTAL SLIDING WINDOW (XO)
IMPACT RESISTANT GLASS

No	DATE	REVISION
1	03-05-12	NO CHANGE THIS SHEET
2	11-18-14	REVISION IN COMPLIANCE WITH FBC 5TH EDITION (2014)

DRAWING No.
HS08-01
DATE: 03-14-08
SCALE: 1/2"=1"

SHEET 3 OF 7

39

MATERIAL LIST

ITEM #	PART #	REQD.	DESCRIPTION	MATERIAL
1	SW-019	1	FRAME HEAD	6063-T5
2	SW-019	1	FRAME SILL	6063-T5
3	SWxxx21	1	INSERT TRACK	6063-T5
5	SW-012	2	SLIDER TOP/BOTTOM RAIL	6063-T5
6	SW3019	AS RQD	FIN SEAL PILE	FELT
8	SW321W	2	WHEEL	BRASS
9	SW-017	1	MOVING MEETING RAIL	6063-T5
10	SW40111	1	FIXED MEETING RAIL	6063-T5
11	SW-AS	AS RQD	ASSEMBLY SCREWS	# 8 X 1" SMS.
12	SW-013	1	JAMB TO MOVING PANEL	6063-T5

MATERIAL LIST

ITEM #	PART #	REQD.	DESCRIPTION	MATERIAL
13	SW-016	1	MOVING SIDE RAIL	6063-T5
14	SW3257	AS RQD	WEATHER STRIP BULB	VINYL
15	SW-667	AS RQD	LATCH	ZINC
16	SW-S10	2/SILL	RETICULATED FILTER	FOAM
17	SW40771	1	SILL RISER	6063-T5
18	SW-014	1	JAMB TO FIXED PANEL	6063-T5
19	–	AS RQD	SILICONE	PEC.-895
20	SW-101	AS RQD	IMPACT GLAZING BEAD	6063-T6
21	SW-STL	1	3/8" X 3/4" FLAT BAR	STEEL
22	SW-AS	4	ASSEMBLY SCREWS	# 8 X 2 1/2" SMS.

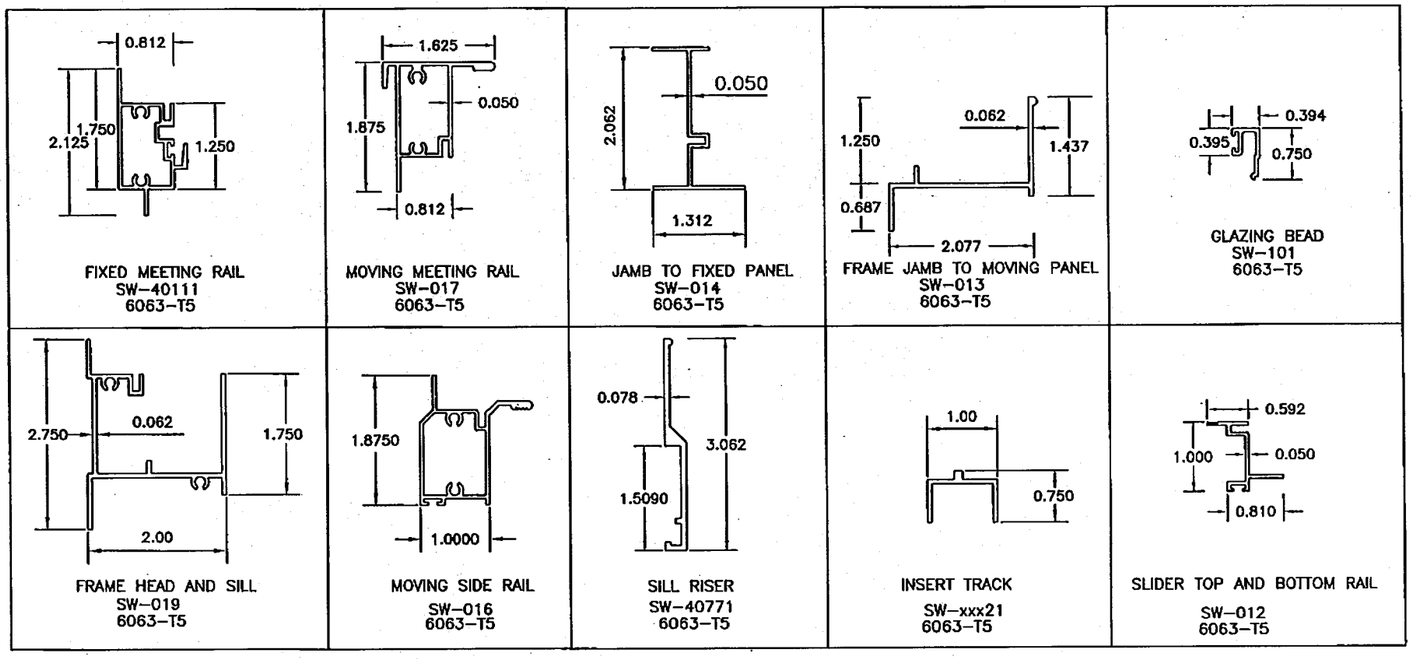

Sunshine Windows Manufacturing, Inc.
1745 W. 33rd Place
Hialeah, Florida 33012
Ph: (305)364-9952
Fax:(305)828-5118

SERIES 1650 ALUMINUM HORIZONTAL SLIDING WINDOW (XO) IMPACT RESISTANT GLASS

No	DATE	REVISION
1	03-05-12	NO CHANGE THIS SHEET
2	11-18-14	REVISION IN COMPLIANCE WITH FBC 5TH EDITION (2014)

DRAWING No. HS08-01

DATE: 03-14-08

SCALE: 1/2"=1"

SHEET 4 OF 7

PRODUCT REVISED
as complying with the Florida
Building Code
Acceptance No 14-1204.11
Expiration Date 04/10/2018
By
Miami Dade Product Control

9-25-15

FRANCISCO HERNANDEZ
FLORIDA PE # 51393

Miami Dade County Department of Regulatory And Economic Resources - Job Copy
0001117799 - 9/19/2017 1:56:22 PM
NOA04-081552017.PDF

Examiner	Date Time Stamp	Disp.	Trade	Stamp Name
Carlos Labiste	8/31/2017 7:54:19 AM	A	STRU	Approved

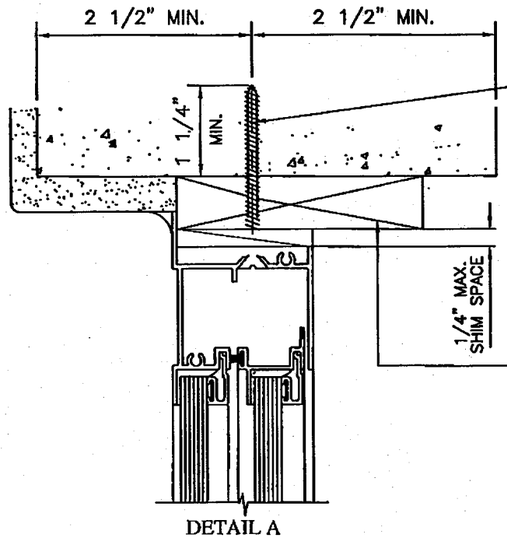

DETAIL A
ATTACHMENT TO MASONRY

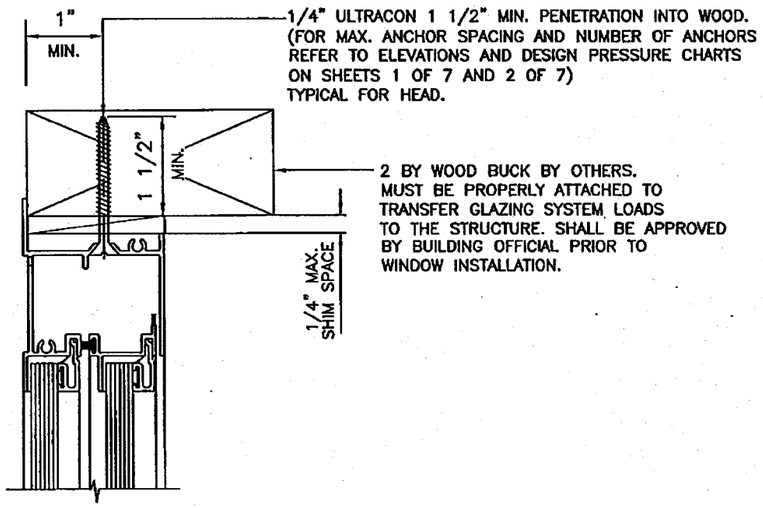

DETAIL B
ATTACHMENT TO WOOD

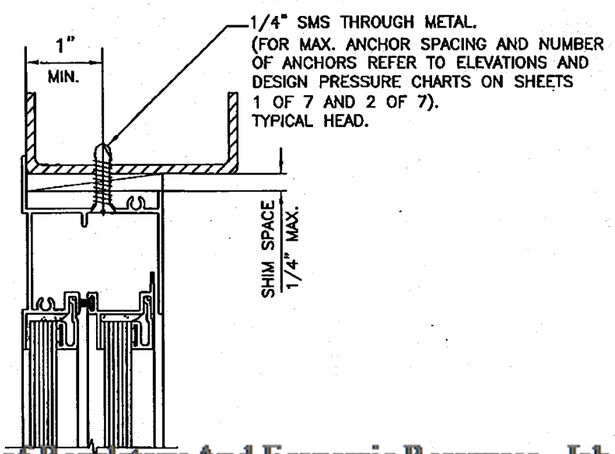

DETAIL C
ATTACHMENT TO METAL STRUCTURE
(STEEL OR ALUMI. 1/8" MIN. THICKNESS)

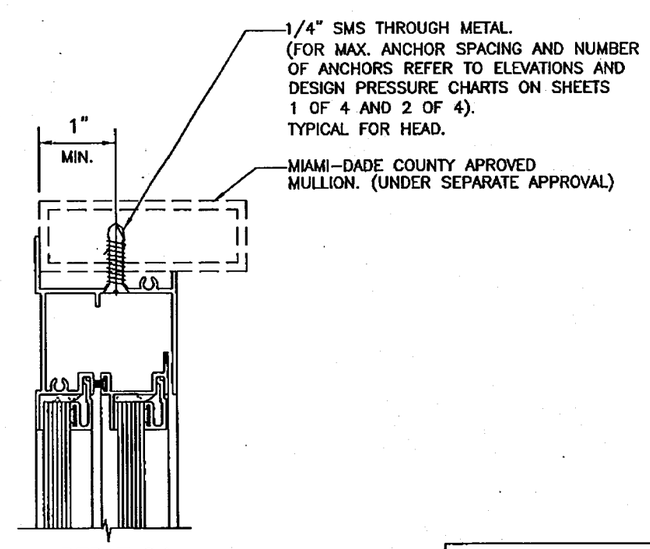

DETAIL C 1
ATTACHMENT TO MULLION

TYPICAL HEAD SECTIONS

PRODUCT REVISED
as complying with the Florida Building Code
Acceptance No 14-1204.11
Expiration Date 04/10/2018
By
Miami Dade Product Control

11-18-14
FRANCISCO HERNANDEZ
FLORIDA PE # 51393

Sunshine Windows Manufacturing, Inc.
1745 W. 33rd Place
Hialeah, Florida 33012
Ph: (305)364-9952
Fax:(305)828-5118

SERIES 1650 ALUMINUM
HORIZONTAL SLIDING WINDOW (XO)
IMPACT RESISTANT GLASS

No	DATE	REVISION
1	03-05-12	UPDATED FOR 2010 FBC
2	11-18-14	REVISION IN COMPLIANCE WITH FBC 5TH EDITION (2014)

DRAWING No.
HS08-01
DATE: 03-14-08
SCALE: 1/2"=1"

SHEET 5 OF 7

40

Miami Dade County Department of Regulatory And Economic Resources - Job Copy
0001117799 - 9/19/2017 1:56:32 PM
NOA04-081552017.PDF
Examiner Date Time Stamp Disp. Trade Stamp Name
Carlos Labiste 8/31/2017 7:54:19 AM A STRU Approved

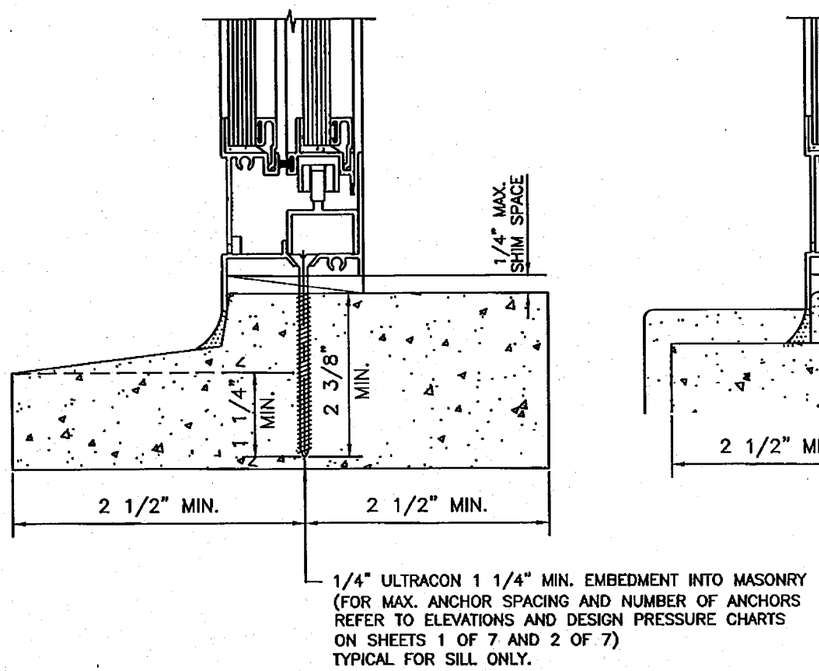

DETAIL D
ATTACHMENT TO PRE-CAST SILL

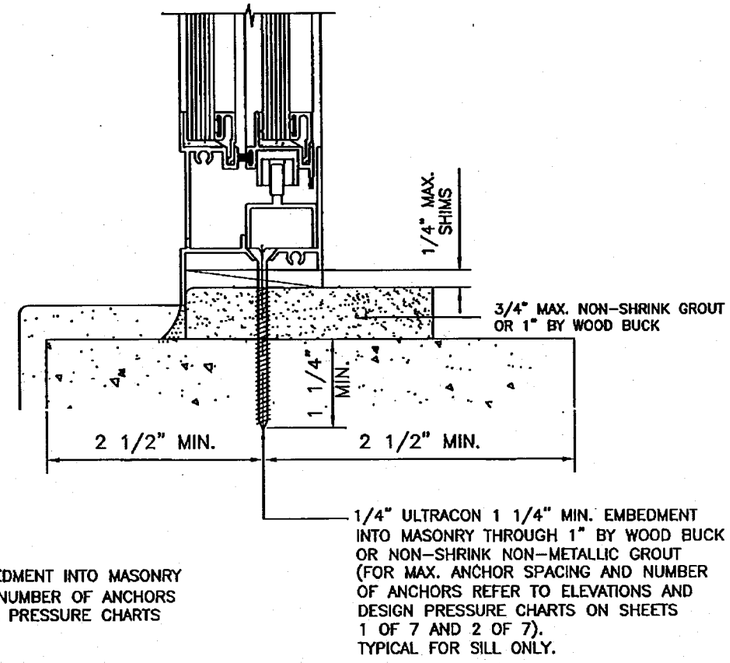

DETAIL E
ATTACHMENT TO MASONRY

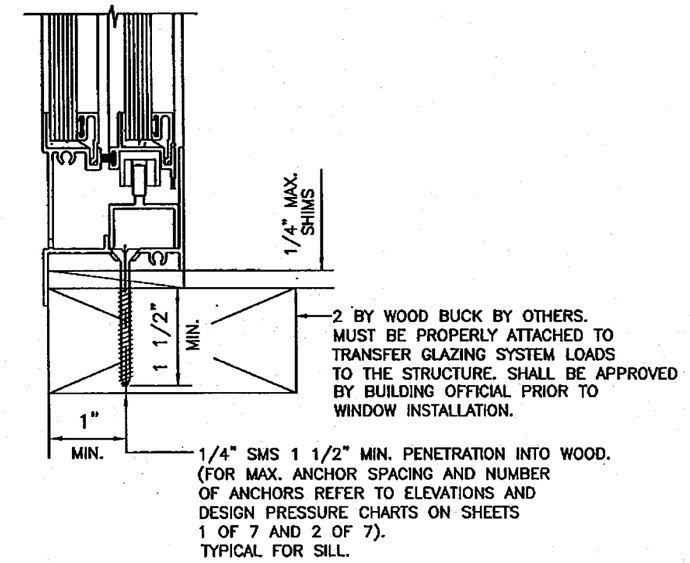

DETAIL F
ATTACHMENT TO WOOD

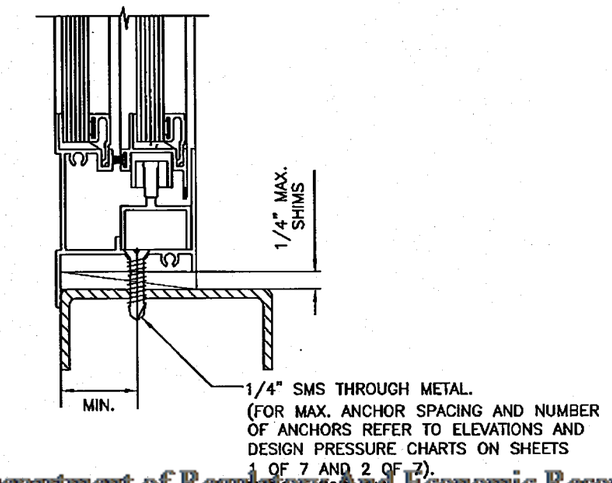

DETAIL G
ATTACHMENT TO METAL STRUCTURE
(STEEL OR ALUM. 1/8" MIN. THICKNESS)

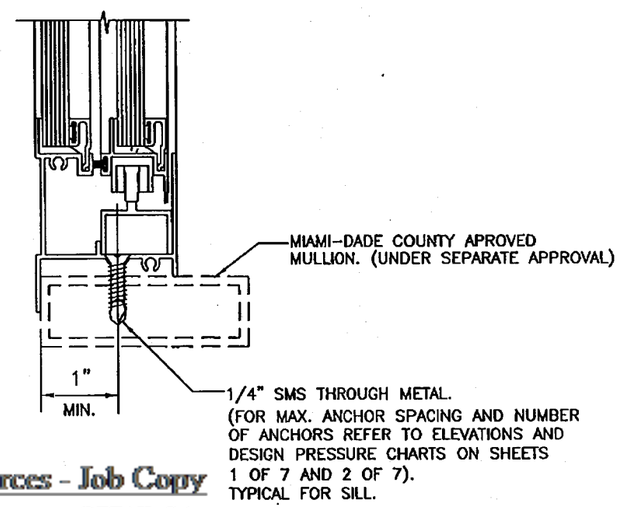

DETAIL G 1
ATTACHMENT TO MULLION
(STEEL OR ALUM. 1/8" MIN. THICKNESS)

TYPICAL SILL SECTIONS

Miami Dade County Department of Regulatory And Economic Resources - Job Copy
0001117799 - 9/19/2017 1:56:22 PM
NOA04-081552017.PDF
Examiner Date Time Stamp Disp. Trade Stamp Name
Carlos Labiste 8/31/2017 7:54:19 AM A STRU Approved

PRODUCT REVISED
as complying with the Florida Building Code
Acceptance No 14-1204.11
Expiration Date 04/10/2018
By
Miami Dade Product Control

11-18-14
FRANCISCO HERNANDEZ
FLORIDA PE # 51393

Sunshine Windows Manufacturing, Inc.
1745 W. 33rd Place
Hialeah, Florida 33012
Ph: (305)364-9952
Fax:(305)828-5118

SERIES 1650 ALUMINUM
HORIZONTAL SLIDING WINDOW (XO)
IMPACT RESISTANT GLASS

No	DATE	REVISION
1	03-05-12	UPDATED FOR 2010 FBC
2	11-18-14	REVISION IN COMPLIANCE WITH FBC 5TH EDITION (2014)

DRAWING No.
HS08-01
DATE: 03-14-08
SCALE: 1/2"=1"

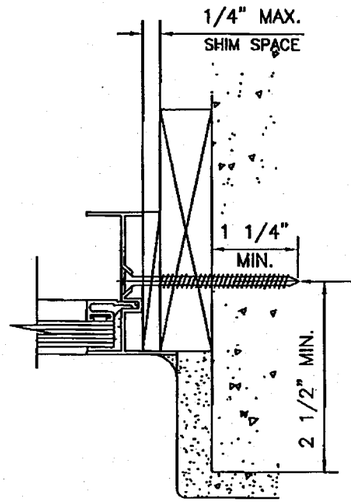

1/4" TAPCONS 1 1/4" MIN. EMBEDMENT INTO MASONRY THROUGH 1" BY WOOD BUCK OR NON SHRINK NON METALLIC GROUT (FOR MAX. ANCHOR SPACING AND NUMBER OF ANCHORS REFER TO ELEVATIONS AND DESIGN PRESSURE CHARTS ON SHEETS 1 OF 7 AND 2 OF 7). TYPICAL FOR JAMBS.

DETAIL H
ATTACHMENT TO MASONRY

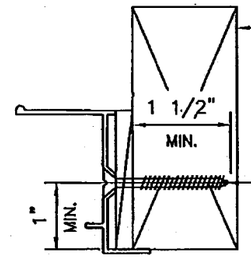

2 BY WOOD BUCK BY OTHERS. MUST BE PROPERLY ATTACHED TO TRANSFER GLAZING SYSTEM LOADS TO THE STRUCTURE. SHALL BE APPROVED BY BUILDING OFFICIAL PRIOR TO WINDOW INSTALLATION.

1/4" SMS 1 1/2" MIN. PENETRATION INTO WOOD. (FOR MAX. ANCHOR SPACING AND NUMBER OF ANCHORS REFER TO ELEVATIONS AND DESIGN PRESSURE CHARTS ON SHEETS 1 OF 7 AND 2 OF 7). TYPICAL FOR JAMBS.

DETAIL I
ATTACHMENT TO WOOD

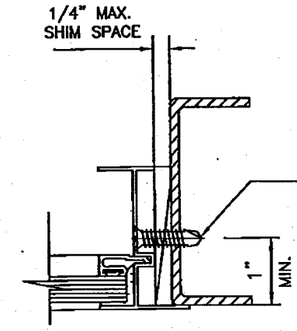

1/4" SMS THROUGH METAL. (FOR MAX. ANCHOR SPACING AND NUMBER OF ANCHORS REFER TO ELEVATIONS AND DESIGN PRESSURE CHARTS ON SHEETS 1 OF 7 AND 2 OF 7). TYPICAL FOR JAMBS.

DETAIL J
ATTACHMENT TO METAL STRUCTURE
(STEEL OR ALUM. 1/8" MIN. THICKNESS)

GLAZING DETAIL

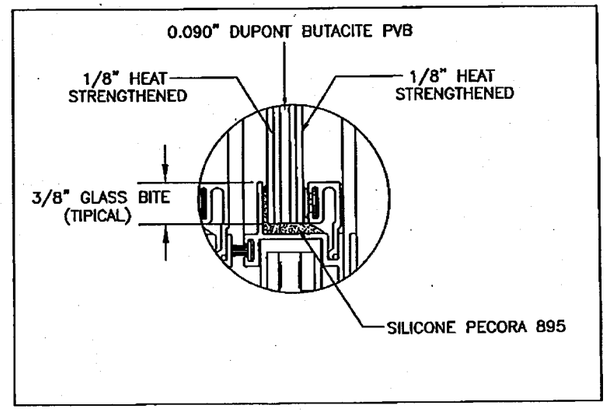

GLAZING: 0.340" OVERALL LAMINATED GLASS USING TWO LITES OF 0.125" HEAT STRENGTHENED GLASS WITH A 0.090" INTERLAYER FILM DUPONT BUTACITE PVB, BETWEEN THE TWO LITES OF GLASS. LAMINATED BY TECNOGLASS OR SIMILAR

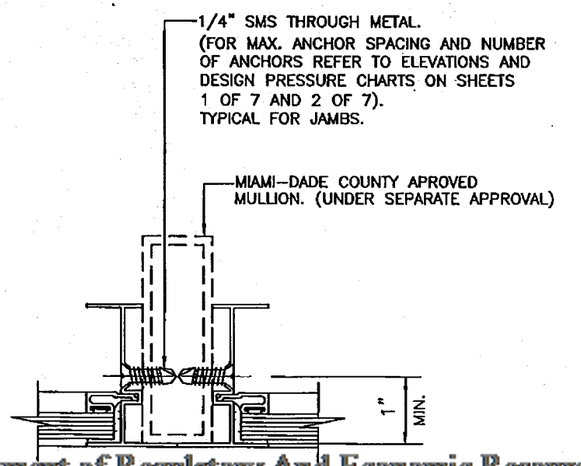

ATTACHMENT TO MULLIONS DETAIL

TYPICAL JAMB SECTIONS

Miami Dade County Department of Regulatory And Economic Resources - Job Copy
0001117799 - 9/19/2017 1:56:22 PM
NOA04-081552017.PDF

Examiner	Date Time Stamp	Disp.	Trade	Stamp Name
Carlos Labiste	8/31/2017 7:54:19 AM	A	STRU	Approved

PRODUCT REVISED
as complying with the Florida Building Code
Acceptance No 14-1204.11
Expiration Date 04/10/2018
By
Miami Dade Product Control

4-25-15

FRANCISCO HERNANDEZ
FLORIDA PE # 51393

Sunshine Windows Manufacturing, Inc.
1745 W. 33rd Place
Hialeah, Florida 33012
Ph: (305)364-9952
Fax:(305)828-5118

SERIES 1650 ALUMINUM
HORIZONTAL SLIDING WINDOW (XO)
IMPACT RESISTANT GLASS

No	DATE	REVISION
1	03-05-12	NO CHANGE THIS SHEET
2	11-18-14	REVISION IN COMPLIANCE WITH FBC 5TH EDITION (2014)

DRAWING No.
HS08-01
DATE: 03-14-08
SCALE: 1/2"=1"

SHEET 7 OF 7