wrightsoft

Building Analysis
Entire House
ARCO ENGINEERING

Job: 2012-1
Date: SEPTEMBER 05,2012
By:

1175 N.E 125 STREET (SUITE 215), NORTH MIAMI, FL 33161 Phone: 305-899-9469 Email: N/A

Project Information

For: ROBINSON GILBERT
3101 NW 54TH STREET, NORTH MIAMI, FL
Fax: N/A
Email: N/A

Design Conditions

Location:
Miami, FL, US
Elevation: 7 ft
Latitude: 26°N

Outdoor:	**Heating**	**Cooling**
Dry bulb (°F)	51	90
Daily range (°F)	-	12 (L)
Wet bulb (°F)	-	77
Wind speed (mph)	15.0	7.5

Indoor:	**Heating**	**Cooling**
Indoor temperature (°F)	73	75
Design TD (°F)	23	15
Relative humidity (%)	30	50
Moisture difference (gr/lb)	-7.5	56.8

Infiltration:

Method	Simplified
Construction quality	Average
Fireplaces	0

Heating

Component	Btuh/ft²	Btuh	% of load
Walls	2.0	2048	4.3
Glazing	28.6	5148	10.9
Doors	0	0	0
Ceilings	0.7	1189	2.5
Floors	22.3	36761	77.6
Infiltration	1.8	2239	4.7
Ducts		0	0
Piping		0	0
Humidification		0	0
Ventilation		0	0
Adjustments		0	
Total		**47385**	**100.0**

Cooling

Component	Btuh/ft²	Btuh	% of load
Walls	1.5	1556	6.2
Glazing	35.3	6356	25.4
Doors	0	0	0
Ceilings	1.7	2876	11.5
Floors	0	0	0
Infiltration	0.7	806	3.2
Ducts		0	0
Ventilation		0	0
Internal gains		13420	53.6
Blower		0	0
Adjustments		0	
Total		**25015**	**100.0**

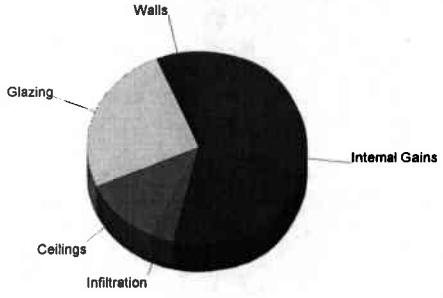

Miami Dade County Department of Regulatory And Economic Resources - Job Copy
00008435 11/20/2012 4:39:20 PM
GENERAL01-09122012.pdf

Latent Cooling Load = 14440 Btuh
Overall U-value = 0.444 Btuh/ft²/°F

WARNING: suspicious slab-on-grade floor perimeter in BEDROOM #1.

Examiner	Date Time Stamp	Disp.	Trade	Stamp Name
John Ariton	10/31/2012 3:40:19 PM	A	MECH	Approved
Jeanne Clarke	11/19/2012 12:27:44 PM	A	STRU	CALCULATIONS

wrightsoft

Load Short Form
Entire House
ARCO ENGINEERING

Job: 2012-1
Date: SEPTEMBER 05,2012
By:

1175 N.E 125 STREET (SUITE 215), NORTH MIAMI, FL 33161 Phone: 305-899-9469 Email: N/A

Project Information

For: ROBINSON GILBERT
3101 NW 54TH STREET, NORTH MIAMI, FL
Fax: N/A
Email: N/A

Design Information

	Htg	Clg
Outside db (°F)	51	90
Inside db (°F)	73	75
Design TD (°F)	23	15
Daily range	-	L
Inside humidity (%)	30	50
Moisture difference (gr/lb)	-7	57

Infiltration

Method	Simplified
Construction quality	Average
Fireplaces	0

HEATING EQUIPMENT

Make		
Trade		
Model		
GAMA ID	n/a	
Efficiency	100 EFF	
Heating input	0	Btuh
Heating output	47385	Btuh
Temperature rise	27	°F
Actual air flow	1600	cfm
Air flow factor	0.034	cfm/Btuh
Static pressure	0.30	in H2O
Space thermostat		

COOLING EQUIPMENT

Make	RHEEM	
Trade	RHEEM	
Cond	RCQD-4821A OR EQUAL	
Coil	RARL-048J-GFD-09?ZCM OR EQUAL	
ARI ref no.	N/A	
Efficiency	12.5 EER, 15 SEER	
Sensible cooling	32550	Btuh
Latent cooling	13950	Btuh
Total cooling	46500	Btuh
Actual air flow	1600	cfm
Air flow factor	0.064	cfm/Btuh
Static pressure	0.30	in H2O
Load sensible heat ratio	0.63	

ROOM NAME	Area (ft²)	Htg load (Btuh)	Clg load (Btuh)	Htg AVF (cfm)	Clg AVF (cfm)
BEDROOM #1	210	6212	3099	210	198
BEDROOM #2	240	6833	3174	231	203
KITCHEN	108	3382	3318	114	212
BEDROOM #3	195	5490	2920	185	187
BATH #1	54	1922	738	65	47
BATH #2	66	2040	674	69	43
BEDROOM #4	240	6377	2685	215	172
BEDROOM #5	176	5069	2666	171	171
BEDROOM #6	168	5048	2913	170	186
STORAGE	70	2142	1611	72	103
HALLWAY	125	2872	1218	97	78

Miami Dade Rapid Department of Regulatory And Economic Resources - Job Copy
0000843587 - 11/26/2012 8:39:26 PM
GENERAL01-09122012.pdf

Examiner	Date Time Stamp	Disp.	Trade	Stamp Name
John Ariton	10/31/2012 3:40:19 PM	A	MECH	Approved
Jeanne Clarke	9/19/2012 12:27:44 PM	1	STRU	CALCULATIONS

Printout certified by ACCA to meet all requirements of Manual J 8th Ed.

Entire House	1652	47385	25015	1600	1600
Other equip loads		0	0		
Equip. @ 0.95 RSM			23864		
Latent cooling			14440		
TOTALS	1652	47385	38304	1600	1600

Miami Dade County Department of Regulatory And Economic Resources - Job Copy
0000843587 - 11/26/2012 8:39:26 PM
GENERAL01-09122012.pdf

Examiner	Date Time Stamp	Disp.	Trade	Stamp Name
John Ariton	10/31/2012 3:40:19 PM	A	MECH	Approved
Jeanne Clarke	9/19/2012 12:27:44 PM	I	STRU	CALCULATIONS

Printout certified by ACCA to meet all requirements of Manual J 8th Ed.

wrightsoft

Component Constructions
Entire House
ARCO ENGINEERING

Job: 2012-1
Date: SEPTEMBER 05,2012
By:

1175 N.E 125 STREET (SUITE 215), NORTH MIAMI, FL 33161 Phone: 305-899-9469 Email: N/A

Project Information

For: ROBINSON GILBERT
3101 NW 54TH STREET, NORTH MIAMI, FL
Fax: N/A
Email: N/A

Design Conditions

Location:
Miami, FL, US
Elevation: 7 ft
Latitude: 26°N

Outdoor:	**Heating**	**Cooling**
Dry bulb (°F)	51	90
Daily range (°F)	-	12 (L)
Wet bulb (°F)	-	77
Wind speed (mph)	15.0	7.5

Indoor:	**Heating**	**Cooling**
Indoor temperature (°F)	73	75
Design TD (°F)	23	15
Relative humidity (%)	30	50
Moisture difference (gr/lb)	-7.5	56.8

Infiltration:

Method	Simplified
Construction quality	Average
Fireplaces	0

Construction descriptions	**Or**	**Area** ft²	**U-value** Btuh/ft²-°F	**Insul R** ft²-°F/Btuh	**Htg HTM** Btuh/ft²	**Loss** Btuh	**Clg HTM** Btuh/ft²	**Gain** Btuh
Walls								
13BB-0ocws: Blk wall, stucco ext, 2"x4" wood int frm, 8" thk, 1/2" gypsum board int fnsh	n	1034	0.088	0	1.98	2048	1.50	1556
Partitions								
(none)								
Windows								
1A-c1om: 1 glazing, clr glz, mtl no brk frm mat, 1/8" thk; 2 ft overhang (3.3 ft window ht, 1.15 ft sep.)	n	180	1.270	0	28.6	5148	35.3	6356
Doors								
(none)								
Ceilings								
16B-30ad: Attic ceiling, asphalt shingles roof mat, r-30 ceil ins, 1/2" gypsum board int fnsh		1652	0.032	30.0	0.72	1189	1.74	2876
Floors								
22A-tpl: Bg floor, light dry soil, tile flr fnsh		1652	0.989	0	22.3	36761	0	0

Miami Dade County Department of Regulatory And Economic Resources - Job Copy
0000843587 - 11/26/2012 8:39:26 PM
GENERAL01-09122012.pdf

Examiner	Date Time Stamp	Disp.	Trade	Stamp Name
John Ariton	10/31/2012 3:40:19 PM	A	MECH	Approved
Jeanne Clarke	11/19/2012 12:27:14 PM	I	STRU	CALCULATIONS

wrightsoft

Project Summary
Entire House
ARCO ENGINEERING

Job: 2012-1
Date: SEPTEMBER 05,2012
By:

1175 N.E 125 STREET (SUITE 215), NORTH MIAMI, FL 33161 Phone: 305-899-9469 Email: N/A

Project Information

For: ROBINSON GILBERT
3101 NW 54TH STREET, NORTH MIAMI, FL
Fax: N/A
Email: N/A
Notes: NEW A/C

Design Information

Weather: Miami, FL, US

Winter Design Conditions

Outside db	51	°F
Inside db	73	°F
Design TD	23	°F

Summer Design Conditions

Outside db	90	°F
Inside db	75	°F
Design TD	15	°F
Daily range	L	
Relative humidity	50	%
Moisture difference	57	gr/lb

Heating Summary

Structure	47385	Btuh
Ducts	0	Btuh
Central vent (0 cfm)	0	Btuh
Humidification	0	Btuh
Piping	0	Btuh
Equipment load	47385	Btuh

Sensible Cooling Equipment Load Sizing

Structure	25015	Btuh
Ducts	0	Btuh
Central vent (0 cfm)	0	Btuh
Blower	0	Btuh
Use manufacturer's data	n	
Rate/swing multiplier	0.95	
Equipment sensible load	23864	Btuh

Infiltration

Method		Simplified
Construction quality		Average
Fireplaces		0
	Heating	**Cooling**
Area (ft²)	1652	1652
Volume (ft³)	14285	14285
Air changes/hour	0.38	0.20
Equiv. AVF (cfm)	90	48

Latent Cooling Equipment Load Sizing

Structure	14440	Btuh
Ducts	0	Btuh
Central vent (0 cfm)	0	Btuh
Equipment latent load	14440	Btuh
Equipment total load	38304	Btuh
Req. total capacity at 0.70 SHR	2.8	ton

Heating Equipment Summary

Make		
Trade		
Model		
GAMA ID	n/a	
Efficiency	100	EFF
Heating input	0	Btuh
Heating output	47385	Btuh
Temperature rise	27	°F
Actual air flow	1600	cfm
Air flow factor	0.034	cfm/Btuh
Static pressure	0.30	in H2O
Space thermostat		

Cooling Equipment Summary

Make	RHEEM	
Trade	RHEEM	
Cond	RCQD-4821A OR EQUAL	
Coil	RARL-048J-GFD-09?ZCM OR EQUAL	
ARI ref no.	N/A	
Efficiency	12.5 EER, 15 SEER	
Sensible cooling	32550	Btuh
Latent cooling	13950	Btuh
Total cooling	46500	Btuh
Actual air flow	1600	cfm
Air flow factor	0.064	cfm/Btuh
Static pressure	0.30	in H2O
Load sensible heat ratio	0.63	

Miami Dade County Department of Regulatory and Economic Resources - Job Copy
0000843587 - 11/8/2012 8:39:26 PM
GENERAL01-AIR FLOW.rup.pdf

Examiner	Date Time Stamp	Disp.	Trade	Stamp Name
John Ariton	10/31/2012 3:40:19 PM	A	MECH	Approved
Jeanne Clarke	9/19/2012 12:27:44 PM	1	STRU	CALCULATIONS

Printout certified by ACCA to meet all requirements of Manual J 8th Ed.

wrightsoft

AED Assessment
Entire House
ARCO ENGINEERING

Job: 2012-1
Date: SEPTEMBER 05,2012
By:

1175 N.E 125 STREET (SUITE 215), NORTH MIAMI, FL 33161 Phone: 305-899-9469 Email: N/A

Project Information

For: ROBINSON GILBERT
3101 NW 54TH STREET, NORTH MIAMI, FL
Fax: N/A
Email: N/A

Design Conditions

Location:
Miami, FL, US
Elevation: 7 ft
Latitude: 26°N

Outdoor:	**Heating**	**Cooling**
Dry bulb (°F)	51	90
Daily range (°F)	-	12 (L)
Wet bulb (°F)	-	77
Wind speed (mph)	15.0	7.5

Indoor:	**Heating**	**Cooling**
Indoor temperature (°F)	73	75
Design TD (°F)	23	15
Relative humidity (%)	30	50
Moisture difference (gr/lb)	-7.5	56.8

Infiltration:

Test for Adequate Exposure Diversity

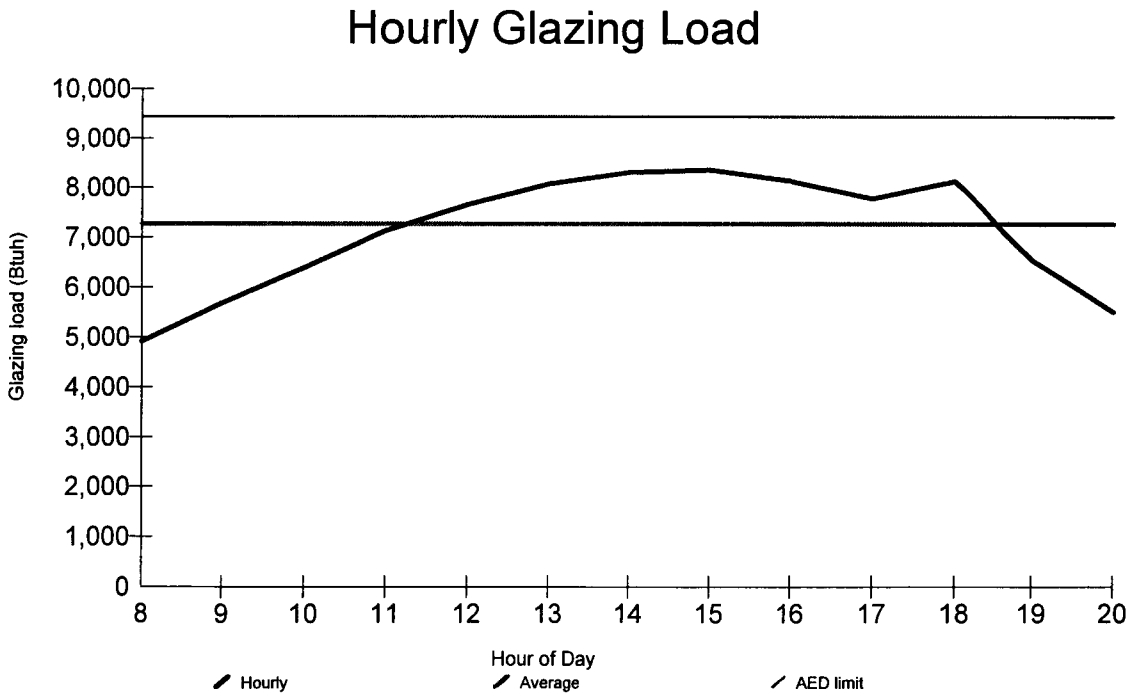

Maximum hourly glazing load exceeds average by 15.1%.

House has adequate exposure diversity (AED), based on AED limit of 30%.

AED excursion: 0 Btuh

Miami Dade County Department of Regulatory And Economic Resources - Job Copy
0000843587 - 11/26/2012 8:39:26 PM
GENERAL01-09/22/2012.pdf

Examiner	Date Time Stamp	Disp.	Trade	Stamp Name
John Ariton	10/31/2012 3:40:19 PM	A	MECH	Approved
Jeanne Clarke	9/19/2012 12:27:44 PM	I	STRU	CALCULATIONS

wrightsoft

Right-J® Worksheet
Entire House
ARCO ENGINEERING

Job: 2012-1
Date: SEPTEMBER 05,2012
By:

1175 N.E 125 STREET (SUITE 215), NORTH MIAMI, FL 33161 Phone: 305-899-9469 Email: N/A

1	Room name						Entire House				BEDROOM #1			
2	Exposed wall						149.9 ft				25.9 ft			
3	Ceiling height						8.6 ft				8.6 ft		heat/cool	
4	Room dimensions										15.0 x 14.0 ft			
5	Room area						1652.0 ft²				210.0 ft²			
	Ty	Construction number	U-value (Btuh/ft²-°F)	Or	HTM (Btuh/ft²)		Area (ft²) or perimeter (ft)		Load (Btuh)		Area (ft²) or perimeter (ft)		Load (Btuh)	
					Heat	Cool	Gross	N/P/S	Heat	Cool	Gross	N/P/S	Heat	Cool
6	W	13BB-0ocws	0.088	n	1.98	1.50	1214	1034	2048	1556	182	156	309	235
.	G	1A-c1om	1.270	n	28.57	35.28	180	0	5148	6356	26	0	743	917
.	D	11O0	0.210	n	0.00	0.00	0	0	0	0	0	0	0	0
.	C	16B-30ad	0.032	-	0.72	1.74	1652	1652	1189	2876	210	210	151	366
11	F	22A-tpl	0.989	-	22.25	0.00	1652	1652	36761	0	210	210	4673	0
6	c) AED excursion									0				0
	Envelope loss/gain								45146	10788			5876	1518
12	a) Infiltration								2239	806			335	121
	b) Room ventilation								0	0			0	0
13	Internal gains:	Occupants @	230				14			3220	2			460
		Appliances/other								10200				1000
	Subtotal (lines 6 to 13)								47385	25015			6212	3099
	Less external load								0	0			0	0
	Less transfer								0	0			0	0
	Redistribution								0	0			0	0
14	Subtotal								47385	25015			6212	3099
15	Duct loads						0%	0%	0	0	0%	0%	0	0
	Total room load								47385	25015			6212	3099
	Air required (cfm)								1600	1600			210	198

Miami Dade County Department of Regulatory And Economic Resources - Job Copy
0000843587 - 11/26/2012 8:39:26 PM
GENERAL1 Rev. 2012.pdf
Examiner Date Time Stamp Disp. Trade Stamp Name
John Ariton 10/31/2012 3:40:19 PM A MECH Approved
Jeanne Clarke 9/19/2012 12:27:44 PM I STRU CALCULATIONS

Printout certified by ACCA to meet all requirements of Manual J 8th Ed.

wrightsoft

Right-J® Worksheet
Entire House
ARCO ENGINEERING

Job: 2012-1
Date: SEPTEMBER 05,2012
By:

1175 N.E 125 STREET (SUITE 215), NORTH MIAMI, FL 33161 Phone: 305-899-9469 Email: N/A

1	Room name						BEDROOM #2				KITCHEN				
2	Exposed wall						16.0 ft				8.0 ft				
3	Ceiling height						8.6 ft		heat/cool		8.6 ft		heat/cool		
4	Room dimensions						15.0 x 16.0 ft				9.0 x 12.0 ft				
5	Room area						240.0 ft²				108.0 ft²				
	Ty	Construction number	U-value (Btuh/ft²-°F)	Or	HTM (Btuh/ft²)		Area (ft²) or perimeter (ft)		Load (Btuh)		Area (ft²) or perimeter (ft)		Load (Btuh)		
					Heat	Cool	Gross	N/P/S	Heat	Cool	Gross	N/P/S	Heat	Cool	
6	W	13BB-0ocws	0.088	n	1.98	1.50	227	210	415	316	80	58	114	87	
.	G	1A-c1om	1.270	n	28.57	35.28	17	0	486	600	22	0	640	790	
.	D	11O0	0.210	n	0.00	0.00	0	0	0	0	0	0	0	0	
.	C	16B-30ad	0.032	-	0.72	1.74	240	240	173	418	108	108	78	188	
11	F	22A-tpl	0.989	-	22.25	0.00	240	240	5341	0	108	108	2403	0	
6	c) AED excursion									0				0	
	Envelope loss/gain								6415	1333			3235	1065	
12	a) Infiltration								418	151			147	53	
	b) Room ventilation								0	0			0	0	
13	Internal gains:	Occupants @	230				3			690	0			0	
		Appliances/other								1000				2200	
	Subtotal (lines 6 to 13)								6833	3174			3382	3318	
	Less external load								0	0			0	0	
	Less transfer								0	0			0	0	
	Redistribution								0	0			0	0	
14	Subtotal								6833	3174			3382	3318	
15	Duct loads						0%	0%	0	0	0%	0%	0	0	
	Total room load								6833	3174			3382	3318	
	Air required (cfm)								231	203			114	212	

Miami Dade County Department of Regulatory And Economic Resources - Job Copy
0000843587 - 11/26/2012 8:39:26 PM
GENERAL01 - 2012.pdf
Examiner Date Time Stamp Disp. Trade Stamp Name
John Ariton 10/31/2012 3:40:19 PM A MECH Approved
Jeanne Clarke 9/19/2012 12:27:44 PM I STRU CALCULATIONS

Printout certified by ACCA to meet all requirements of Manual J 8th Ed.

wrightsoft

Right-J® Worksheet
Entire House
ARCO ENGINEERING

Job: 2012-1
Date: SEPTEMBER 05,2012
By:

1175 N.E 125 STREET (SUITE 215), NORTH MIAMI, FL 33161 Phone: 305-899-9469 Email: N/A

		BEDROOM #3	BATH #1
1	Room name	BEDROOM #3	BATH #1
2	Exposed wall	13.0 ft	6.0 ft
3	Ceiling height	8.6 ft heat/cool	8.6 ft heat/cool
4	Room dimensions	15.0 x 13.0 ft	6.0 x 9.0 ft
5	Room area	195.0 ft²	54.0 ft²

	Ty	Construction number	U-value (Btuh/ft²-°F)	Or	HTM (Btuh/ft²) Heat	HTM (Btuh/ft²) Cool	Area (ft²) or perimeter (ft) Gross	Area (ft²) or perimeter (ft) N/P/S	Load (Btuh) Heat	Load (Btuh) Cool	Area (ft²) or perimeter (ft) Gross	Area (ft²) or perimeter (ft) N/P/S	Load (Btuh) Heat	Load (Btuh) Cool
6	W	13BB-0ocws	0.088	n	1.98	1.50	146	129	255	194	83	69	136	104
.	G	1A-c1om	1.270	n	28.57	35.28	17	0	486	600	14	0	393	485
.	D	11O0	0.210	n	0.00	0.00	0	0	0	0	0	0	0	0
.	C	16B-30ad	0.032	-	0.72	1.74	195	195	140	339	54	54	39	94
11	F	22A-tpl	0.989	-	22.25	0.00	195	195	4339	0	54	54	1202	0
6	c) AED excursion									0				0
	Envelope loss/gain								5221	1133			1770	683
12	a) Infiltration								269	97			152	55
	b) Room ventilation								0	0			0	0
13	Internal gains:	Occupants @ 230					3			690	0			0
		Appliances/other								1000				0
	Subtotal (lines 6 to 13)								5490	2920			1922	738
	Less external load								0	0			0	0
	Less transfer								0	0			0	0
	Redistribution								0	0			0	0
14	Subtotal								5490	2920			1922	738
15	Duct loads						0%	0%	0	0	0%	0%	0	0
	Total room load								5490	2920			1922	738
	Air required (cfm)								185	187			65	47

Miami Dade County Department of Regulatory And Economic Resources - Job Copy
0000843587 - 11/26/2012 8:39:26 PM
GENERAL01 - 2012.pdf
Examiner Date Time Stamp Disp. Trade Stamp Name
John Ariton 10/31/2012 3:40:19 PM A MECH Approved
Jeanne Clarke 9/19/2012 12:27:44 PM I STRU CALCULATIONS

Printout certified by ACCA to meet all requirements of Manual J 8th Ed.

wrightsoft

Right-J® Worksheet
Entire House
ARCO ENGINEERING

Job: 2012-1
Date: SEPTEMBER 05,2012
By:

1175 N.E 125 STREET (SUITE 215), NORTH MIAMI, FL 33161 Phone: 305-899-9469 Email: N/A

		BATH #2	BEDROOM #4
1	Room name	BATH #2	BEDROOM #4
2	Exposed wall	6.0 ft	15.0 ft
3	Ceiling height	8.6 ft heat/cool	8.6 ft heat/cool
4	Room dimensions	11.0 x 6.0 ft	16.0 x 15.0 ft
5	Room area	66.0 ft²	240.0 ft²

	Ty	Construction number	U-value (Btuh/ft²-°F)	Or	HTM (Btuh/ft²) Heat	HTM (Btuh/ft²) Cool	Area (ft²) or perimeter (ft) Gross	Area (ft²) or perimeter (ft) N/P/S	Load (Btuh) Heat	Load (Btuh) Cool	Area (ft²) or perimeter (ft) Gross	Area (ft²) or perimeter (ft) N/P/S	Load (Btuh) Heat	Load (Btuh) Cool
6	W	13BB-0ocws	0.088	n	1.98	1.50	40	26	51	38	108	91	179	136
.	G	1A-c1om	1.270	n	28.57	35.28	14	0	400	494	17	0	486	600
.	D	11O0	0.210	n	0.00	0.00	0	0	0	0	0	0	0	0
.	C	16B-30ad	0.032	-	0.72	1.74	66	66	48	115	240	240	173	418
11	F	22A-tpl	0.989	-	22.25	0.00	66	66	1469	0	240	240	5341	0

6	c) AED excursion									0				0
	Envelope loss/gain								1967	647			6178	1154
12	a) Infiltration								73	26			198	71
	b) Room ventilation								0	0			0	0
13	Internal gains:	Occupants @	230				0			0	2			460
		Appliances/other								0				1000
	Subtotal (lines 6 to 13)								2040	674			6377	2685
	Less external load								0	0			0	0
	Less transfer								0	0			0	0
	Redistribution								0	0			0	0
14	Subtotal								2040	674			6377	2685
15	Duct loads						0%	0%	0	0	0%	0%	0	0
	Total room load								2040	674			6377	2685
	Air required (cfm)								69	43			215	172

Miami Dade County Department of Regulatory And Economic Resources - Job Copy
0000843587 - 11/26/2012 8:39:26 PM
GENERAL01 - 2012 2.pdf
Examiner Date Time Stamp Disp. Trade Stamp Name
John Ariton 10/31/2012 3:40:19 PM A MECH Approved
Jeanne Clarke 9/19/2012 12:27:44 PM I STRU CALCULATIONS

Printout certified by ACCA to meet all requirements of Manual J 8th Ed.

wrightsoft

Right-J® Worksheet
Entire House
ARCO ENGINEERING

Job: 2012-1
Date: SEPTEMBER 05,2012
By:

1175 N.E 125 STREET (SUITE 215), NORTH MIAMI, FL 33161 Phone: 305-899-9469 Email: N/A

1	Room name						BEDROOM #5				BEDROOM #6			
2	Exposed wall						27.0 ft				26.0 ft			
3	Ceiling height						8.6 ft		heat/cool		8.6 ft		heat/cool	
4	Room dimensions						16.0 x 11.0 ft				14.0 x 12.0 ft			
5	Room area						176.0 ft²				168.0 ft²			
	Ty	Construction number	U-value (Btuh/ft²-°F)	Or	HTM (Btuh/ft²)		Area (ft²) or perimeter (ft)		Load (Btuh)		Area (ft²) or perimeter (ft)		Load (Btuh)	
					Heat	Cool	Gross	N/P/S	Heat	Cool	Gross	N/P/S	Heat	Cool
6	W	13BB-0ocws	0.088	n	1.98	1.50	150	133	263	200	130	104	206	156
.	G	1A-c1om	1.270	n	28.57	35.28	17	0	486	600	26	0	743	917
.	D	11O0	0.210	n	0.00	0.00	0	0	0	0	0	0	0	0
.	C	16B-30ad	0.032	-	0.72	1.74	176	176	127	306	168	168	121	292
11	F	22A-tpl	0.989	-	22.25	0.00	176	176	3916	0	168	168	3738	0
6	c) AED excursion									0				0
	Envelope loss/gain								4792	1106			4808	1366
12	a) Infiltration								277	100			240	86
	b) Room ventilation								0	0			0	0
13	Internal gains:	Occupants @	230				2			460	2			460
		Appliances/other								1000				1000
	Subtotal (lines 6 to 13)								5069	2666			5048	2913
	Less external load								0	0			0	0
	Less transfer								0	0			0	0
	Redistribution								0	0			0	0
14	Subtotal								5069	2666			5048	2913
15	Duct loads						0%	0%	0	0	0%	0%	0	0
	Total room load								5069	2666			5048	2913
	Air required (cfm)								171	171			170	186

Miami Dade County Department of Regulatory And Economic Resources - Job Copy
0000843587 - 11/26/2012 8:39:26 PM
GENERAL01 - 0000843587 2.pdf
Examiner Date Time Stamp Disp. Trade Stamp Name
John Ariton 10/31/2012 3:40:19 PM A MECH Approved
Jeanne Clarke 9/19/2012 12:27:44 PM I STRU CALCULATIONS

Printout certified by ACCA to meet all requirements of Manual J 8th Ed.

wrightsoft

Right-J® Worksheet
Entire House
ARCO ENGINEERING

Job: 2012-1
Date: SEPTEMBER 05,2012
By:

1175 N.E 125 STREET (SUITE 215), NORTH MIAMI, FL 33161 Phone: 305-899-9469 Email: N/A

1	Room name						STORAGE				HALLWAY			
2	Exposed wall						7.0 ft				0 ft			
3	Ceiling height						9.0 ft		heat/cool		9.0 ft		heat/cool	
4	Room dimensions						10.0 x 7.0 ft				5.0 x 25.0 ft			
5	Room area						70.0 ft²				125.0 ft²			
	Ty	Construction number	U-value (Btuh/ft²-°F)	Or	HTM (Btuh/ft²)		Area (ft²) or perimeter (ft)		Load (Btuh)		Area (ft²) or perimeter (ft)		Load (Btuh)	
					Heat	Cool	Gross	N/P/S	Heat	Cool	Gross	N/P/S	Heat	Cool
6	W	13BB-0ocws	0.088	n	1.98	1.50	70	60	119	90	0	0	0	0
.	G	1A-c1om	1.270	n	28.57	35.28	10	0	286	353	0	0	0	0
.	D	11O0	0.210	n	0.00	0.00	0	0	0	0	0	0	0	0
.	C	16B-30ad	0.032	-	0.72	1.74	70	70	50	122	125	125	90	218
11	F	22A-tpl	0.989	-	22.25	0.00	70	70	1558	0	125	125	2782	0
6	c) AED excursion									0				0
	Envelope loss/gain								2013	565			2872	218
12	a) Infiltration								129	46			0	0
	b) Room ventilation								0	0			0	0
13	Internal gains:	Occupants @	230				0			0	0			0
		Appliances/other								1000				1000
	Subtotal (lines 6 to 13)								2142	1611			2872	1218
	Less external load								0	0			0	0
	Less transfer								0	0			0	0
	Redistribution								0	0			0	0
14	Subtotal								2142	1611			2872	1218
15	Duct loads						0%	0%	0	0	0%	0%	0	0
	Total room load								2142	1611			2872	1218
	Air required (cfm)								72	103			97	78

Miami Dade County Department of Regulatory And Economic Resources - Job Copy
0000843587 - 11/26/2012 8:39:26 PM
GENERAL01_RSU_2012.pdf
Examiner Date Time Stamp Disp. Trade Stamp Name
John Ariton 10/31/2012 3:40:19 PM A MECH Approved
Jeanne Clarke 9/19/2012 12:27:44 PM I STRU CALCULATIONS

Printout certified by ACCA to meet all requirements of Manual J 8th Ed.

MECAWind Version 2.1.0.6 ASCE 7-10

Developed by MECA Enterprises, Inc. Copyright 2012 www.mecaenterprises.com

Date	: 9/6/2012	Project No.	:
Company Name	: ARCON ENGINEERING	Designed By	: ARSHAD VIQAR
Address	: 1175 NE 125 STREET	Description	: INTERIOR REMODELING
City	: NORTH MIAMI	Customer Name	: MR. ROBINSON GILBERT
State	: FLORIDA	Proj Location	: 3101 NW 54TH STREET

File Location: C:\Program Files\MECAWind\ROBINSON GILBERT.wnd

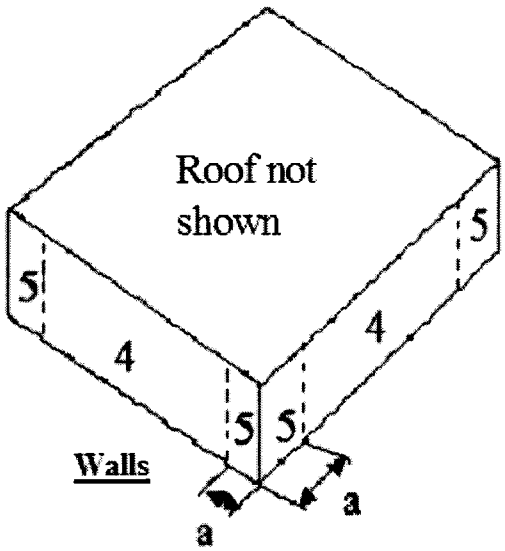

Walls

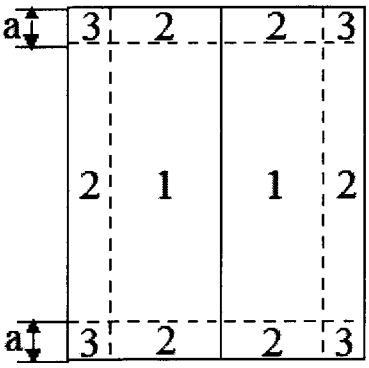

Gable Roof θ <= 7

Wind Pressure on Components and Cladding (Ch 30 Part 1)

All pressures shown are based upon ASD Design, with a Load Factor of .6

Width of Pressure Coefficient Zone "a" = 3.2 ft

Description	Width ft	Span ft	Area ft^2	Zone	Max GCp	Min GCp	Max P psf	Min P psf
Window #1 SH25	3.20	5.30	17.0	4	0.86	-0.95	34.73	-37.73
Window #1 SH25	3.20	5.30	17.0	5	0.86	-1.19	34.73	-45.50
Window #2 SH34	4.60	4.30	19.8	4	0.85	-0.94	34.38	-37.37
Window #2 SH34	4.60	4.30	19.8	5	0.85	-1.17	34.38	-44.79
Win. #3 2SH25	6.40	5.30	33.9	4	0.82	-0.91	33.14	-36.14
Win. #3 2SH25	6.40	5.30	33.9	5	0.82	-1.09	33.14	-42.32
Windows #4 SH23	3.30	3.20	10.6	4	0.90	-0.99	35.82	-38.82
Windows #4 SH23	3.30	3.20	10.6	5	0.90	-1.25	35.82	-47.68
Win. #5 1/2 SH23	1.60	3.30	5.3	4	0.90	-0.99	35.95	-38.94
Win. #5 1/2 SH23	1.60	3.30	5.3	5	0.90	-1.26	35.95	-47.93
Win. SH(2)26X51	4.30	4.40	18.9	4	0.86	-0.95	34.48	-37.48
Win. SH(2)26X51	4.30	4.40	18.9	5	0.86	-1.17	34.48	-45.00

Miami Dade County Department of Regulatory And Economic Resources - Job Copy

0000843587 - 11/26/2012 8:39:26 PM

GENERAL01-09122012.pdf

Examiner	Date Time Stamp	Disp.	Trade	Stamp Name
John Ariton	10/31/2012 3:40:19 PM	A	MECH	Approved
Jeanne Clarke	9/19/2012 12:27:44 PM	I	STRU	CALCULATIONS

LICENSE No. 38[illegible]

9-10-12

MECAWind Version 2.1.0.6 per ASCE 7-10

Developed by MECA Enterprises, Inc. Copyright 2012 www.mecaenterprises.com

Date	: 9/11/2012	Project No.	:
Company Name	: ARCON ENGINEERING	Designed By	: ARSHAD VIQAR
Address	: 1175 NE 125 STREET	Description	: INTERIOR REMODELING
City	: NORTH MIAMI	Customer Name	: MR. ROBINSON GILBERT
State	: FLORIDA	Proj Location	: 3101 NW 54TH STREET

File Location: C:\Program Files\MECAWind\ROBINSON GILBERT.wnd

Directional Procedure Simplified Diaphragrm Building (Ch 27 Part 2)

All pressures shown are based upon ASD Design, with a Load Factor of .6

Basic Wind Speed(V)	= 175.00 mph				
Structural Category	= II	Exposure Category	=	C	
Natural Frequency	= N/A	Flexible Structure	=	No	
Importance Factor	= 1.00	Kd Directional Factor	=	0.85	
Alpha	= 9.50	Zg	=	900.00	ft
At	= 0.11	Bt	=	1.00	
Am	= 0.15	Bm	=	0.65	
Cc	= 0.20	l	=	500.00	ft
Epsilon	= 0.20	Zmin	=	15.00	ft
Slope of Roof	= 0.25 : 12	Slope of Roof(Theta)	=	1.20	Deg
Ht: Mean Roof Ht	= 18.00 ft	Type of Roof	=	Monoslope	
RHt: Ridge Ht	= 18.00 ft	Eht: Eave Height	=	18.00	ft
OH: Roof Overhang at Eave	= 0.25 ft	Roof Area	=	1699.00	ft^2
Bldg Length Along Ridge	= 53.50 ft	Bldg Width Across Ridge	=	31.50	ft

Gust Factor Category I Rigid Structures - Simplified Method

Gust1: For Rigid Structures (Nat. Freq.>1 Hz) use 0.85 = 0.85

Gust Factor Category II Rigid Structures - Complete Analysis

Zm:	0.6*Ht	=	15.00 ft
lzm:	Cc*(33/Zm)^0.167	=	0.23
Lzm:	l*(Zm/33)^Epsilon	=	427.06 ft
Q:	(1/(1+0.63*((B+Ht)/Lzm)^0.63))^0.5	=	0.93
Gust2:	0.925*((1+1.7*lzm*3.4*Q)/(1+1.7*3.4*lzm))	=	0.89

Gust Factor Summary

Not a Flexible Structure use the Lessor of Gust1 or Gust2 = 0.85

Table 26.11-1 Internal Pressure Coefficients for Buildings, GCpi

GCPi : Internal Pressure Coefficient = +/-0.18

Topographic Adjustment

0.33*z	=	5.94
Kzt (0.33*z): Topographic factor at elevation 0.33*z	=	1.00
Vtopo: Adjust V per Para 27.5.2: V * [Kzt(0.33*z)]^0.5	=	175.00 mph

Net Wind Pressures on Walls (Table 27.6-1)

Wall Pressures do not include effect of internal pressure

Miami Dade County Department of Regulatory And Economic Resources - Job Copy
0000843587 - 11/26/2012 8:39:26 PM
GENERAL01-09122012.pdf
Examiner Date Time Stamp Disp Trade Stamp Name
John Ariton 10/31/2012 3:40:19 PM A MECH Approved
Jeanne Clarke 9/19/2012 12:27:44 PM 1 STRU CALCULATIONS

MWFRS-Wall Pressures for Wind Normal to 31.5 ft wall

L/B		=	1.70
ph:	Net Pressure at top of wall (windward + leeward)	=	35.76 psf
p0:	Net Pressure at bottom of wall (windward + leeward)	=	35.19 psf
ps:	Side wall pressure acting uniformly outward = .61 * ph	=	21.81 psf
pl:	Leeward wall pressure acting uniformly outward = .3 * ph	=	10.84 psf
pwh:	Windward wall pressure acting uniformly outward = ph-pl	=	24.92 psf
pw0:	Windward wall pressure acting uniformly outward = p0-pl	=	24.35 psf

MECAWind Version 2.1.0.6 per ASCE 7-10

Developed by MECA Enterprises, Inc. Copyright 2012 www.mecaenterprises.com

Date	: 9/11/2012	Project No.	:
Company Name	: ARCON ENGINEERING	Designed By	: ARSHAD VIQAR
Address	: 1175 NE 125 STREET	Description	: INTERIOR REMODELING
City	: NORTH MIAMI	Customer Name	: MR. ROBINSON GILBERT
State	: FLORIDA	Proj Location	: 3101 NW 54TH STREET

File Location: C:\Program Files\MECAWind\ROBINSON GILBERT.wnd

Directional Procedure Simplified Diaphragrm Building (Ch 27 Part 2)

All pressures shown are based upon ASD Design, with a Load Factor of .6

Basic Wind Speed(V)	= 175.00 mph				
Structural Category	= II	Exposure Category	=	C	
Natural Frequency	= N/A	Flexible Structure	=	No	
Importance Factor	= 1.00	Kd Directional Factor	=	0.85	
Alpha	= 9.50	Zg	=	900.00	ft
At	= 0.11	Bt	=	1.00	
Am	= 0.15	Bm	=	0.65	
Cc	= 0.20	l	=	500.00	ft
Epsilon	= 0.20	Zmin	=	15.00	ft
Slope of Roof	= 0.25 : 12	Slope of Roof(Theta)	=	1.20	Deg
Ht: Mean Roof Ht	= 18.00 ft	Type of Roof	=	Monoslope	
RHt: Ridge Ht	= 18.00 ft	Eht: Eave Height	=	18.00	ft
OH: Roof Overhang at Eave	= 0.25 ft	Roof Area	=	1699.00	ft^2
Bldg Length Along Ridge	= 53.50 ft	Bldg Width Across Ridge	=	31.50	ft

Gust Factor Category I Rigid Structures - Simplified Method

Gust1: For Rigid Structures (Nat. Freq.>1 Hz) use 0.85 = 0.85

Gust Factor Category II Rigid Structures - Complete Analysis

Zm:	0.6*Ht	=	15.00 ft
lzm:	Cc*(33/Zm)^0.167	=	0.23
Lzm:	l*(Zm/33)^Epsilon	=	427.06 ft
Q:	(1/(1+0.63*((B+Ht)/Lzm)^0.63))^0.5	=	0.93
Gust2:	0.925*((1+1.7*lzm*3.4*Q)/(1+1.7*3.4*lzm))	=	0.89

Gust Factor Summary

Not a Flexible Structure use the Lessor of Gust1 or Gust2 = 0.85

Table 26.11-1 Internal Pressure Coefficients for Buildings, GCpi

GCPi : Internal Pressure Coefficient = +/-0.18

Topographic Adjustment

0.33*z	=	5.94
Kzt (0.33*z): Topographic factor at elevation 0.33*z	=	1.00
Vtopo: Adjust V per Para 27.5.2: V * [Kzt(0.33*z)]^0.5	=	175.00 mph

Net Wind Pressures on Walls (Table 27.6-1)

Wall Pressures do not include effect of internal pressure

Miami Dade County Department of Regulatory And Economic Resources - Job Copy
0000843587 - 11/26/2012 8:39:26 PM
GENERAL01-0912202.pdf
Examiner Date Time Stamp Disp. Trade Stamp Name
John Ariton 10/31/2012 3:40:19 PM A MECH Approved
Jeanne Clarke 9/19/2012 12:27:44 PM 1 STRU CALCULATIONS

MWFRS-Wall Pressures for Wind Normal to 31.5 ft wall

L/B		=	1.70
ph:	Net Pressure at top of wall (windward + leeward)	=	35.76 psf
p0:	Net Pressure at bottom of wall (windward + leeward)	=	35.19 psf
ps:	Side wall pressure acting uniformly outward = .61 * ph	=	21.81 psf
pl:	Leeward wall pressure acting uniformly outward = .3 * ph	=	10.84 psf
pwh:	Windward wall pressure acting uniformly outward = ph-pl	=	24.92 psf
pw0:	Windward wall pressure acting uniformly outward = p0-pl	=	24.35 psf

MWFRS-Wall Pressures for Wind Normal to 53.5 ft wall

L/B	=	0.59
ph: Net Pressure at top of wall (windward + leeward)	=	39.37 psf
p0: Net Pressure at bottom of wall (windward + leeward)	=	38.70 psf
ps: Side wall pressure acting uniformly outward = .54 * ph	=	21.26 psf
pl: Leeward wall pressure acting uniformly outward = .38 * ph	=	14.96 psf
pwh: Windward wall pressure acting uniformly outward = ph-pl	=	24.41 psf
pw0: Windward wall pressure acting uniformly outward = p0-pl	=	23.74 psf

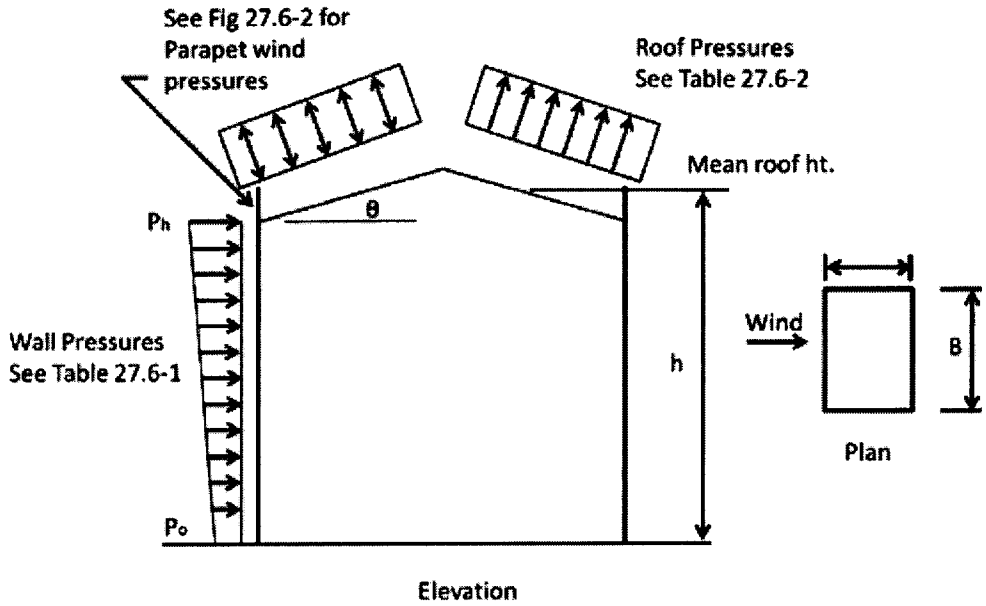

Net Wind Pressures on Roof (Table 27.6-2):

Exposure Adjustment Factor = 1.000

Zone	Load Case1 psf	Load Case2 psf
1	.00	.00
2	.00	.00
3	-37.41	.00
4	-33.37	.00
5	-27.36	.00

Note: A value of '0' indicates that the zone/load case is not applicable.

Miami Dade County Department of Regulatory And Economic Resources - Job Copy

0000843587 - 11/26/2012 8:39:26 PM

GENERAL01-09122012.pdf

Examiner	Date Time Stamp	Disp.	Trade	Stamp Name
John Ariton	10/31/2012 3:40:19 PM	A	MECH	Approved
Jeanne Clarke	9/19/2012 12:27:44 PM	I	STRU	CALCULATIONS

MWFRS-Wall Pressures for Wind Normal to 53.5 ft wall

L/B	=	0.59
ph: Net Pressure at top of wall (windward + leeward)	=	39.37 psf
p0: Net Pressure at bottom of wall (windward + leeward)	=	38.70 psf
ps: Side wall pressure acting uniformly outward = .54 * ph	=	21.26 psf
pl: Leeward wall pressure acting uniformly outward = .38 * ph	=	14.96 psf
pwh: Windward wall pressure acting uniformly outward = ph-pl	=	24.41 psf
pw0: Windward wall pressure acting uniformly outward = p0-pl	=	23.74 psf

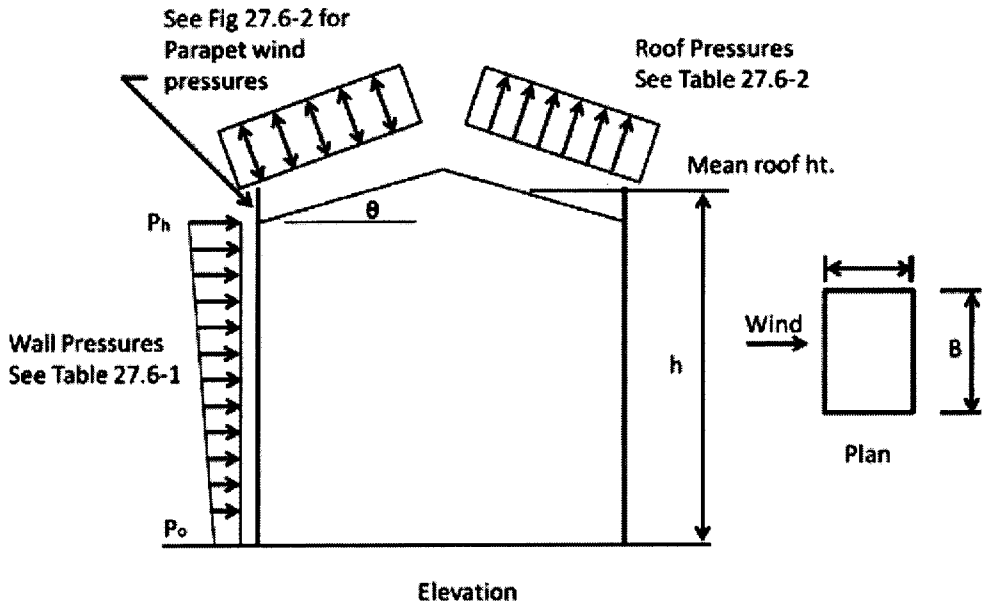

Net Wind Pressures on Roof (Table 27.6-2):

Exposure Adjustment Factor = 1.000

Zone	Load Case1 psf	Load Case2 psf
1	.00	.00
2	.00	.00
3	-37.41	.00
4	-33.37	.00
5	-27.36	.00

Note: A value of '0' indicates that the zone/load case is not applicable.

Miami Dade County Department of Regulatory And Economic Resources - Job Copy

0000843587 - 11/26/2012 8:39:26 PM

GENERAL01-09122012.pdf

Examiner	Date Time Stamp	Disp.	Trade	Stamp Name
John Ariton	10/31/2012 3:40:19 PM	A	MECH	Approved
Jeanne Clarke	9/19/2012 12:27:44 PM	I	STRU	CALCULATIONS

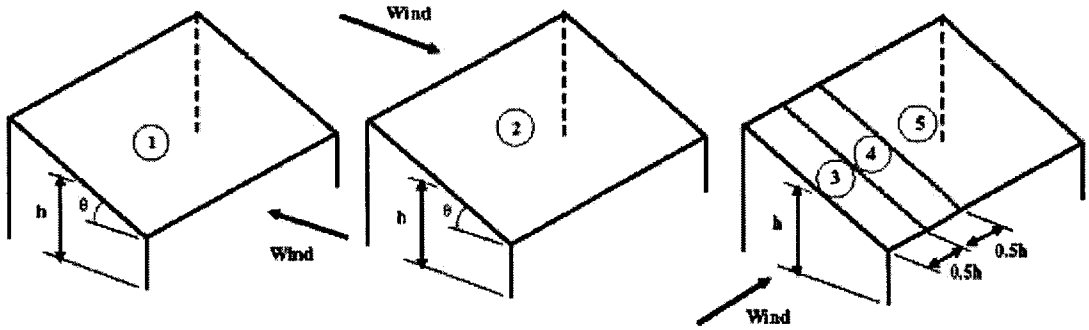

Monoslope Roof

Roof Overhang Loads (Figure 27.6-3):

Load Case 1:

Povh1: Overhang pressure for zone 1	=	.00 psf
Povh3: Overhang pressure for zone 3	=	-28.06 psf

Load Case 2:

Povh1: Overhang pressure for zone 1	=	.00 psf
Povh3: Overhang pressure for zone 3	=	.00 psf

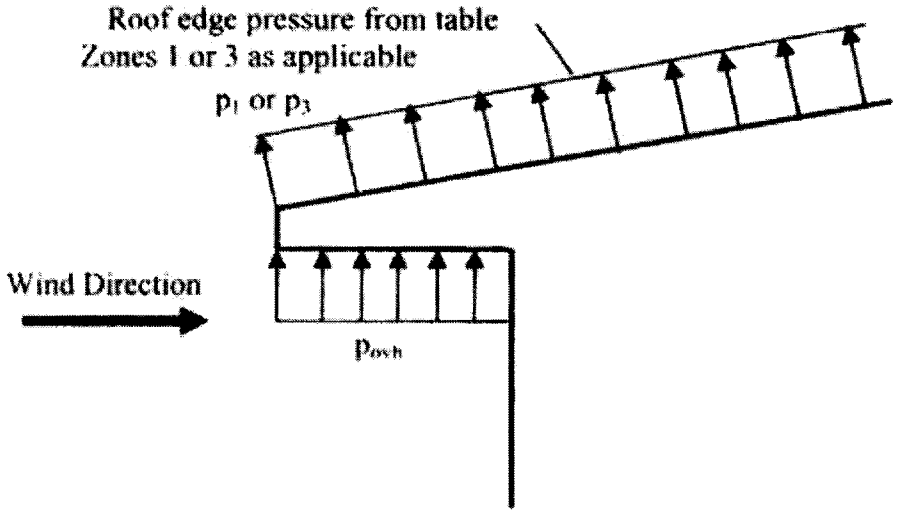

Miami Dade County Department of Regulatory And Economic Resources - Job Copy
0000843587 - 11/26/2012 8:39:26 PM
GENERAL01-09122012.pdf

Examiner	Date Time Stamp	Disp.	Trade	Stamp Name
John Ariton	10/31/2012 3:40:19 PM	A	MECH	Approved
Jeanne Clarke	9/19/2012 12:27:44 PM	I	STRU	CALCULATIONS

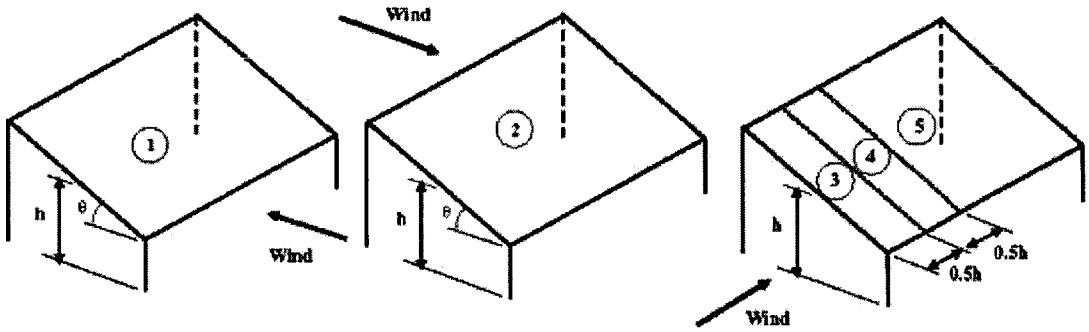

Monoslope Roof

Roof Overhang Loads (Figure 27.6-3):

Load Case 1:

Povh1: Overhang pressure for zone 1	=	.00 psf
Povh3: Overhang pressure for zone 3	=	-28.06 psf

Load Case 2:

Povh1: Overhang pressure for zone 1	=	.00 psf
Povh3: Overhang pressure for zone 3	=	.00 psf

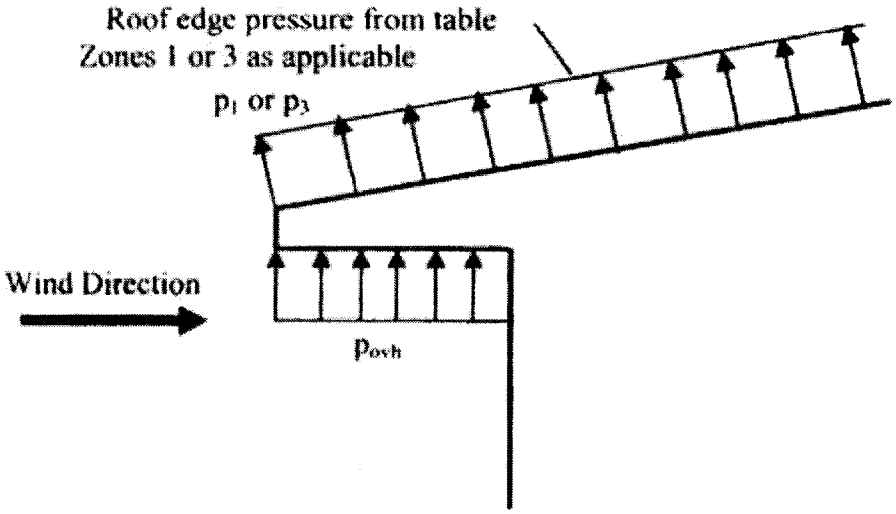

Miami Dade County Department of Regulatory And Economic Resources - Job Copy
0000843587 - 11/26/2012 8:39:26 PM
GENERAL01-09122012.pdf

Examiner	Date Time Stamp	Disp.	Trade	Stamp Name
John Ariton	10/31/2012 3:40:19 PM	A	MECH	Approved
Jeanne Clarke	9/19/2012 12:27:44 PM	I	STRU	CALCULATIONS