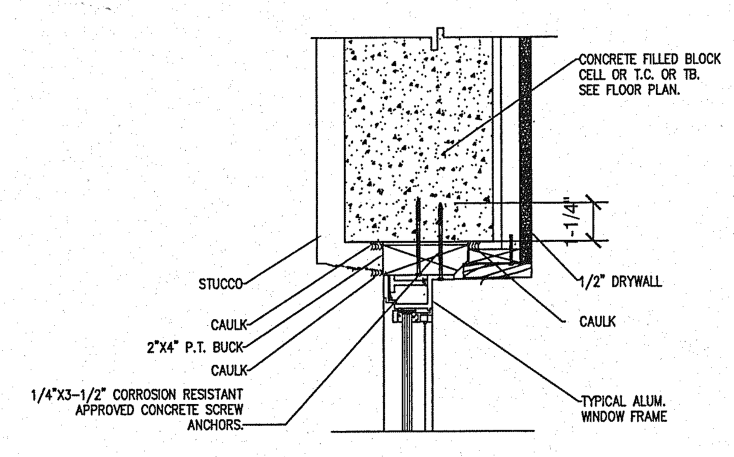

TYPICAL WINDOW DETAIL

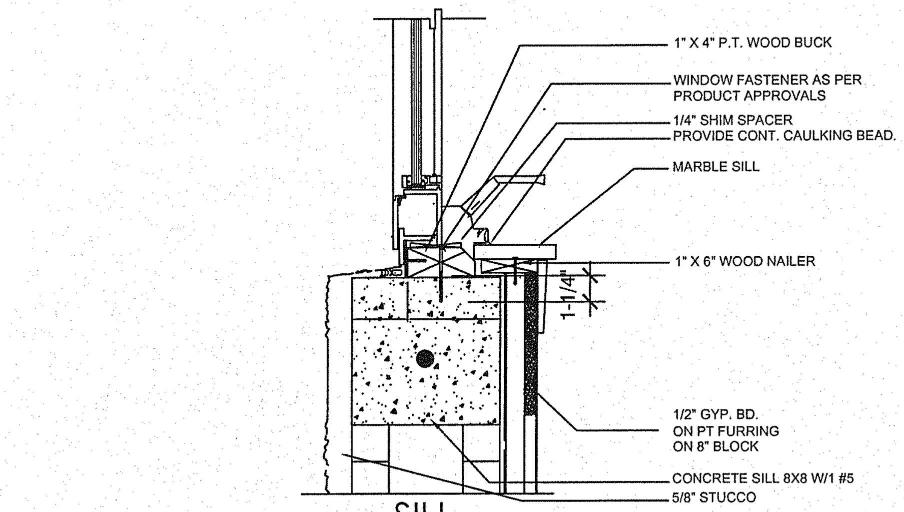

SILL

(6) WINDOW AND DOOR BUCK DETAIL

N.T.S.

- IF THE DESIGN PRESSURES IN THE WINDOW DOES NOT EXCEED 65 P.S.F., SECURE THE 2" WOOD BUCK TO THE STRUCTURE USING 1/4" X 3 1/4" CORROSION RESISTANCE APPROVED CONCRETE ANCHORS WITH A MINIMUM EMBEDMENT OF 1 1/4" @ 16" O.C. (6" FROM THE ENDS) ON 3000 P.S.I. CONCRETE AND @ 16"O.C. (6" FROM THE ENDS) ON ASTM C-90 CONCRETE BLOCKS OR SECURE THE WINDOW DIRECTLY TO THE STRUCTURE WITH 1/4"X3 1/4"CORROSION RESISTANT APPROVED CONCRETE ANCHORS WITH A MINIMUM EMBEDMENT OF 1 1/4" SPACED AS IT IS ON THE NOTICE OF ACCEPTANCE. A NOMINAL 1"X3" P.T. WOOD SPACER SHALL BE USED BETWEEN THE WINDOW AND THE STRUCTURE BUT THE EMBEDMENT IN THE CONCRETE BLOCK SHALL REMAIN TO BE 1 1/4"MIN.
- ALL 2"X WOOD BUCK END/OR 1"X3" WOOD SPACER SHALL BE PROPERLY CAULKED.
- REFER TO THE INSTALLATION INSTRUCTIONS FOR THE SPECIFIC PRODUCT BEING INSTALLED AND SHIM, LEVER, AND SQUARE TO ENSURE PROPER OPERATION.
- FILL VOID BETWEEN WINDOW AND WOOD BUCK WITH INSULATION, BEING CAREFUL NOT TO BOW WINDOW FRAME.
- APPLY A CONTINUOUS BEAD OF URETHANE SEALANT AROUND WINDOW. CHECK MANUFCT.'T RECOMMENDATIONS FOR SURFACE PREP., APPLICATION, AND INSTALLATION.

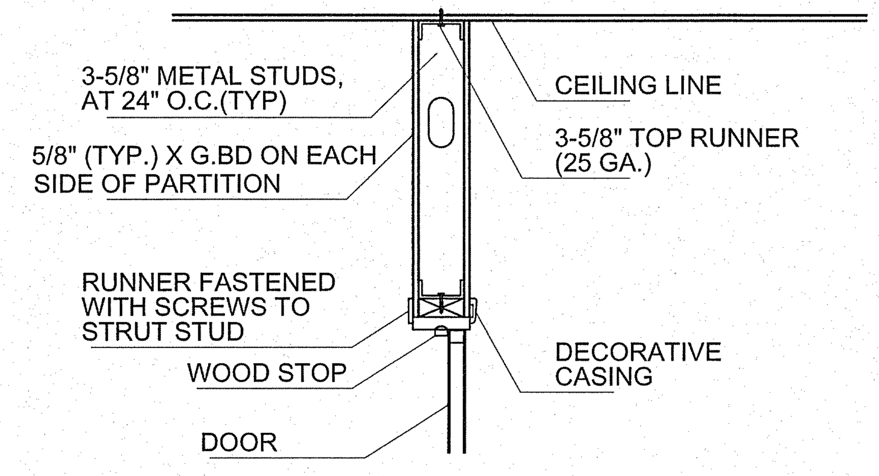

WOOD DOOR HEAD

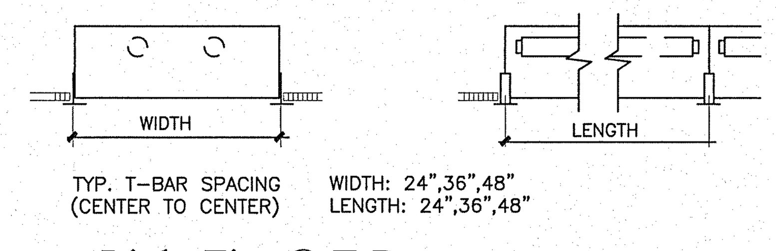

Light Fix. @ T-Bar

3"=1'-0"

CEILING DETAILS
N.T.S.

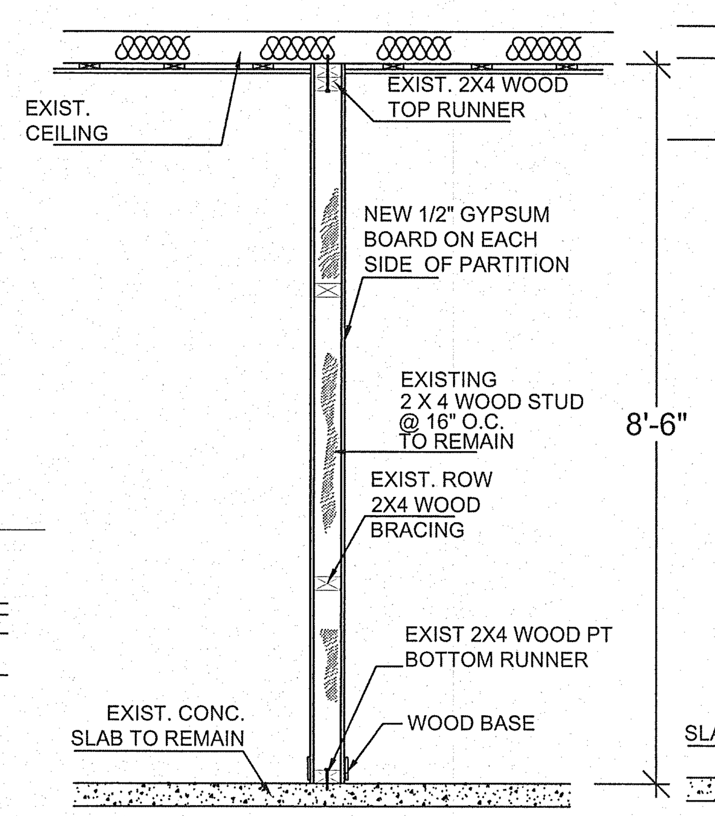

(A) NON-RATED NON-BEARING PARTITION (TYP.)

SCALE: NTS.

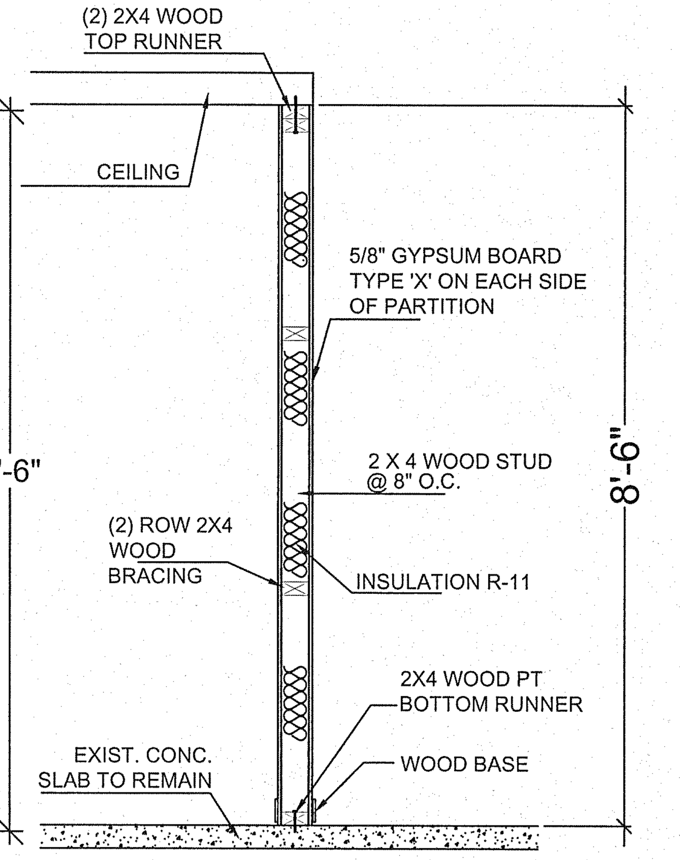

1- HR. FIRE RATED NON BEARING PARTITION UL - U337 (B) SCALE: NTS.

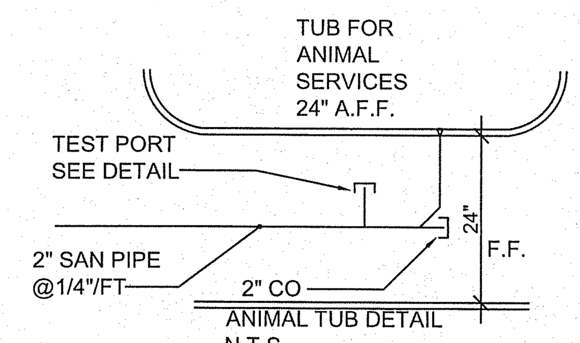

ANIMAL TUB DETAIL
N.T.S.

TEST PORT LOCATED AT EACH FIXTUR UNIT. SEE P-1

X-RAY EQUIPMENT SPECS:

DIDGITAL-NO WET SYSTEM FOR X-RAY ROOM

Intel Xeon inside. The new range of IBM System x® servers with the latest Intel® Xeon® E5-2600 and E5-2400 series processors is designed to address the distinctive demands of your business. Incredibly flexible and easy to scale for future requirements, these servers can be further customized to best suit your unique business requirements.

The new family of IBM System x servers offers:

Industry-leading reliability1 along with up to 84% performance improvement over previous generation 2-socket systems2

Integrated management with remote access capabilities and security

Expanded scalability with up to 768 GB memory3 and up to 24 TB internal storage

High-speed networking with 10 Gb Ethernet support as well as legacy 1 Gb support

Derm Requirements. Clinic operation:

A. Evaluation of the animal like dogs, cats. Medical treatment to be organized After evaluation: first help, recipe & out. Hospitalization and/o surgery

B. Products list, actions and impact on environment. Items 2 and 3 in the comments Chemical products as per Derm requirements

1. Isoflurane.	Anesthetic.	No waste to city collection system.
2. Metacan.		Dispose of city requirements
3. Dexium-SP.		Not disposal to city
4. B-comject.		Disposal in dry landfill
5. Baytril.		Waste as per label instructions
6. Iverhart.		Waste as per DERM regulations
7. Vet solutions.		Waste as per DEM regulations
8. Sucralfate tablets, USP.		Disposal as per federal state regulations.
9. Vetalog parenteral.		Flow in water (200%) to disposal
10. Cimetidine.		Disposal as per federal state regulations
11. Medicated shampoo.	Aloe & oatmeal shampoo.	Disposal as per federal state regulations.
12. Metronidazole.		Disposal as per federal state regulations.
13. Vet Solutions.		Disposal as per federal state regulations.
14. Vitality system.		Disposal as per federal state regulations.
15. Dermayer ointment.		Disposal as per federal state regulations.
16. Hydroxizyne.		Disposal as per federal state regulations.

C. See sterilizer, autoclave, dyer in laundry area and disposal area (tub) to disinfect all products before throw-out. 55 gall container not to be proposed. Mechanical system is enough to remove and cleaning remaining gases. Stainless steel container to be provided at each room to waste. See plans

D. Not wet system in the x-ray room. See dry system specs. On plans. Sink, tubs, lavatories and fixture units to be provided with sampling port as shown on drawings.

E. No wastewater in contact with chemicals will be discharged into sanitary sewer

Treatment of the products to disposal shall be controlled by local authorities having Jurisdiction and federal state regulations with separate inspections

PROVIDE AT EACH ROOM 8 GALL STAINLESS STEEL COLLECTION SPECIMENS

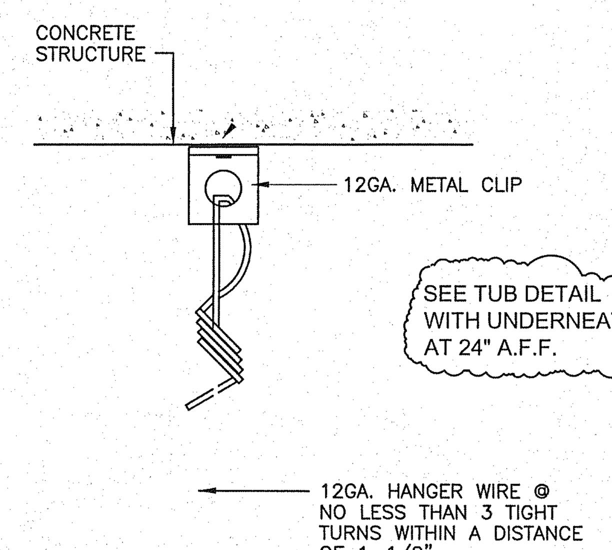

NOTE:
WHEN INSTALLING DRILLED-IN ANCHORS AND/OR POWDER DRIVEN PINS IN EXISTING NON-PRESTRESSED REINFORCED CONCRETE, USE CARE AND CAUTION TO AVOID CUTTING OR DAMAGING THE EXISTING REINFORCING BARS, MAINTAIN 1" CLEAR BETWEEN ANCHOR AND REINFORCING.

VERTICAL HANGER WIRE

3"=1'-0"

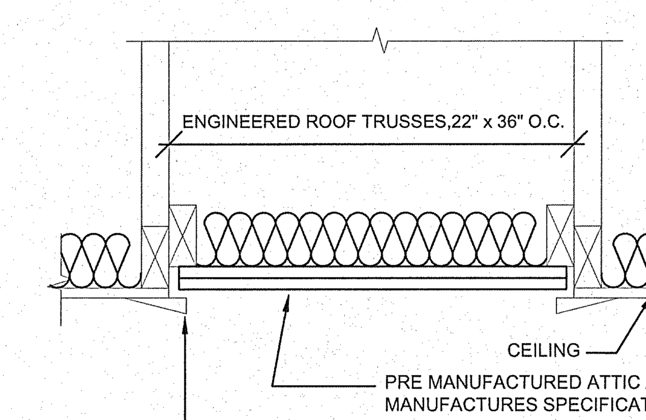

CEILING ACCESS HATCH

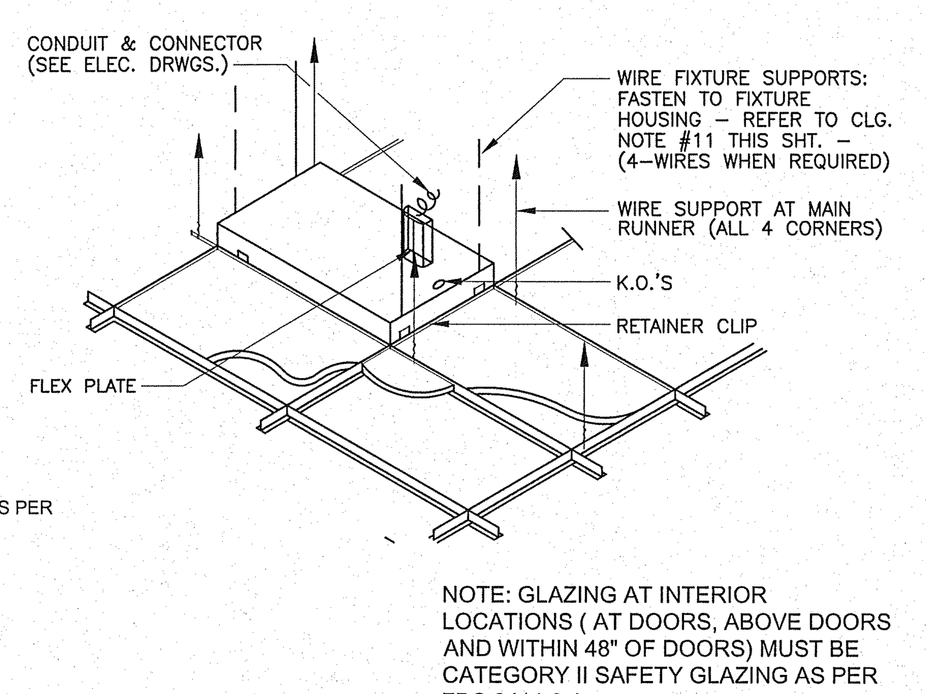

NOTE: GLAZING AT INTERIOR LOCATIONS (AT DOORS, ABOVE DOORS AND WITHIN 48" OF DOORS) MUST BE CATEGORY II SAFETY GLAZING AS PER FBC 2411.6.4

EXISTING DOOR SCHEDULE

MARK	DESCRIPTION	SIZE W	SIZE H	SIZE T	MATERIAL DOOR	MATERIAL FRAME	REMARKS
①	SWING DOOR	2'-10"	6'-8"		GLASS/MTL	MTL	EXT.DOOR
②	GLASS DOOR	6'-0"	6'-8"		GLASS/MTL	MTL	EXT .DOOR
③	SWING DOOR	2'-10"	6'-8"		GLASS/MTL	MTL	INT .DOOR
④	GLASS DOOR	2'-10"	6'-8'		GLASS/MTL	MTL	XRY .DOOR*
⑤	LOUVER DOOR	2'-10"	6'-8'		GLASS/MTL	MTL	INT .DOOR

SAFETY NOTES FOR DOORS
CLOSETS AND BATHROOMS: NFPA 101 - 1994 CHAPTER 21 (21-2.4.3) EVERY CLOSET DOOR LATCH SHALL BE SUCH THAT CHILDREN CAN OPEN THE DOOR FROM INSIDE THE CLOSET (21-2.4.4) EVERY BATHROOM DOOR LOCK SHALL BE DESIGNED TO PERMIT THE OPENING OF THE LOCKED DOOR FROM THE EGRESS DOOR TYPE OF LOCK OR LATCH MUST COMPLY W/FBC R311.4.4. OUTSIDE IN AN EMERGENCY.

* XRAY DOOR TO BE INTERIOR PROTECTED WITH 1/16" LEAD AS SHOWN ON DETAILS XRAY ROOM

NOTE: GLAZING AT INTERIOR LOCATIONS (AT DOORS, ABOVE DOORS AND WITHIN 48" OF DOORS) MUST BE CATEGORY II SAFETY GLAZING AS PER FBC 2411.6.4

Miami Dade County Department of Regulatory And Economic Resources - Job Copy
0000725367 - 1/8/2013 11:23:30 AM
A-2-11202012.PDF
Examiner | Date Time Stamp | Disp. | Trade | Stamp Name
Houshang Khabari | 12/13/2012 4:33:01 PM | V | BLDG | Void

NOTE: ALL CEILING TO BE AT 8'-6" ABOVE FINISH FLOOR

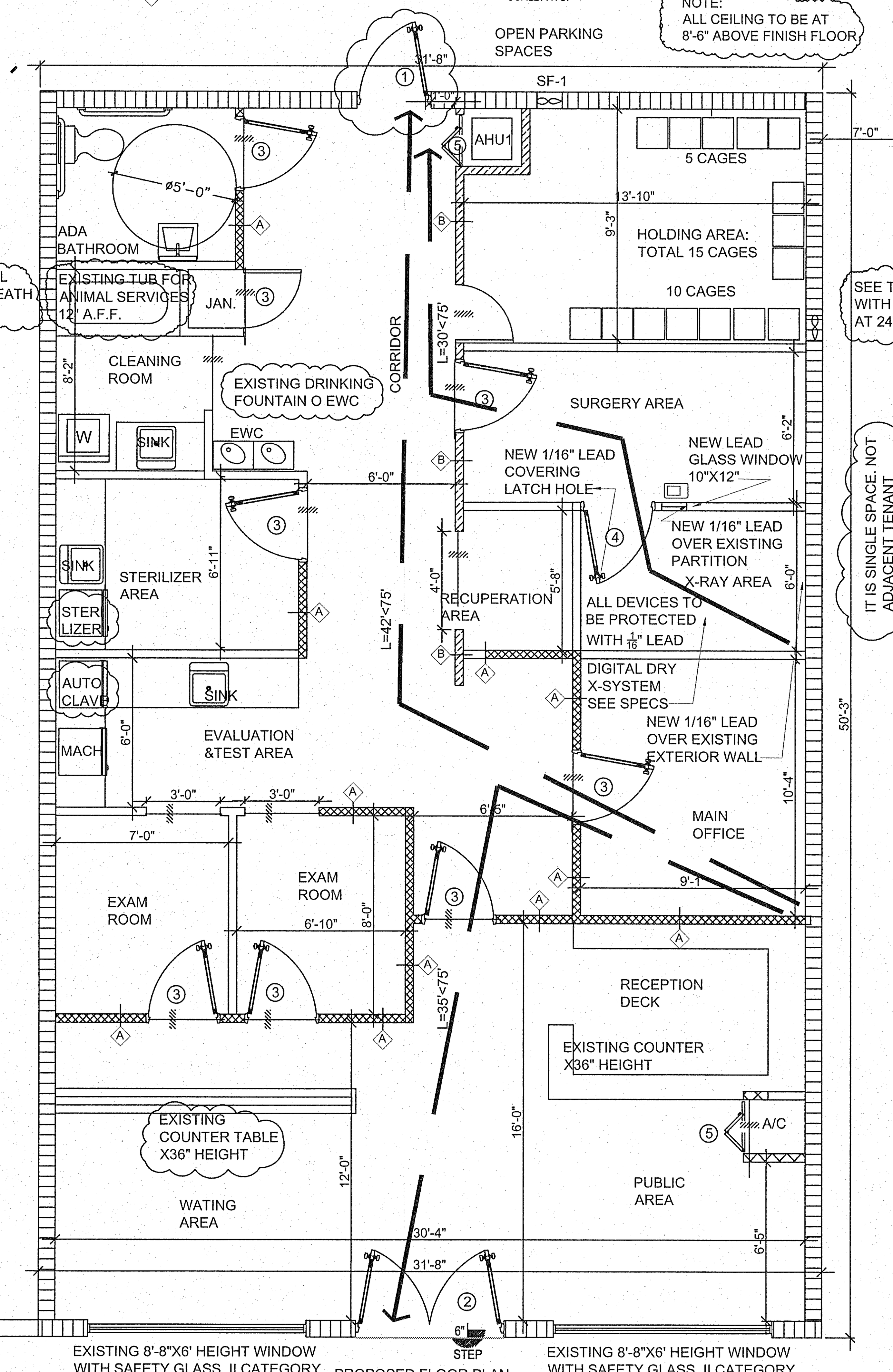

PROPOSED FLOOR PLAN
SCALE :1/4"=1'-0"

NO ANY SITE WORK BEING DONE

NOT MICROFILM WERE GOT

NO ANY SITE WORK BEING DONE

LEGEND
- EXIT SIGN & EMERGENCY LIGHTS COMBO
- (A) DENOTE 4" EXISTING NON BEARING PARTITION TO BE REPLACED BY ONE HOUR FIRE RATED PARTITION
- (B) DENOTE 4" NEW NON BEARING PARTITION ONE HOUR FIRE RATED PARTITION

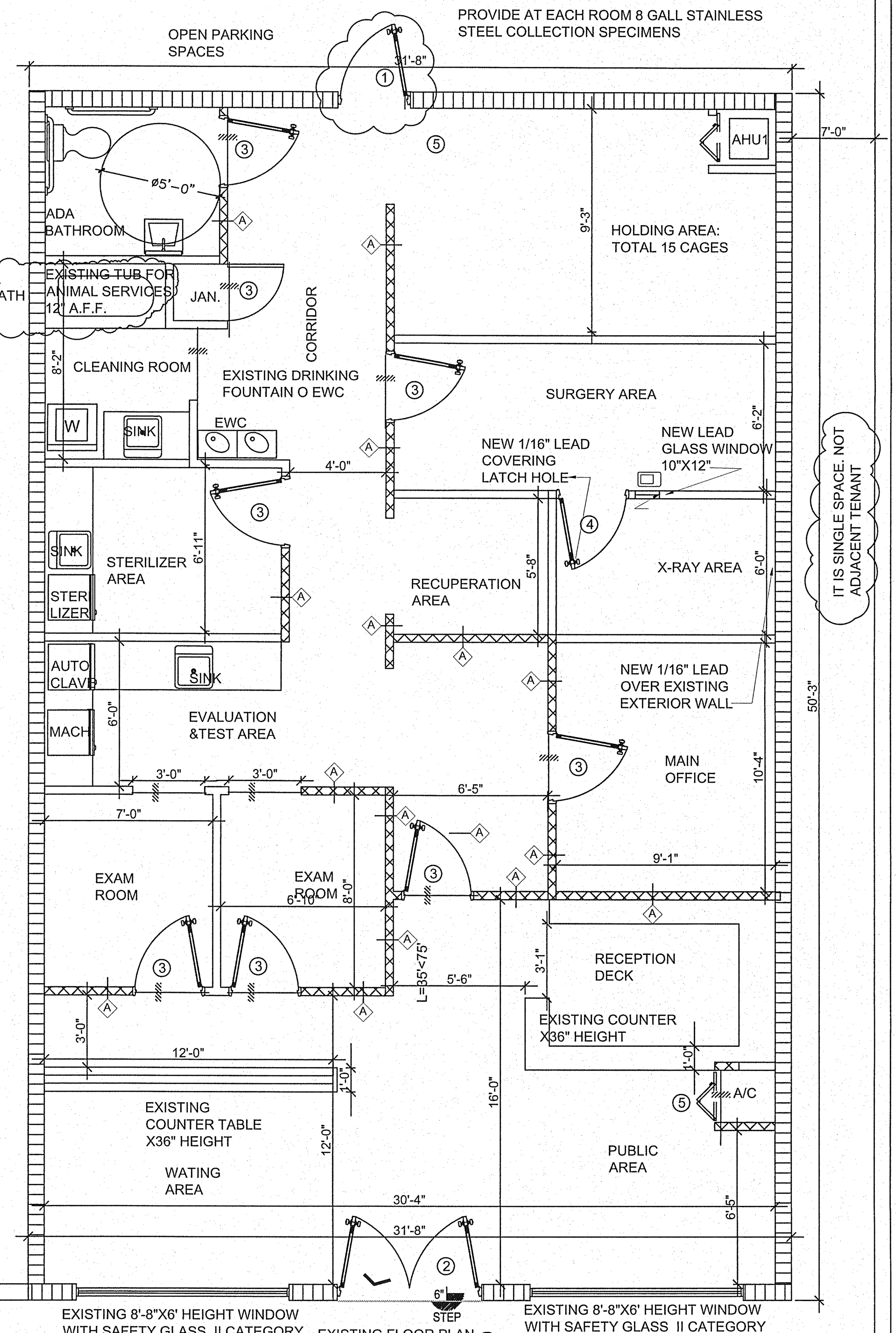

EXISTING FLOOR PLAN
SCALE :1/4"=1'-0"

LEGEND
- DENOTE 4" EXISTING NON BEARING PARTITION TO BE REPLACED BY ONE HOUR FIRE RATED PARTITION
- DENOTE 4" NEW NON BEARING PARTITION ONE HOUR FIRE RATED. SEE UL337

LEGEND
- EXISTING CONCRETE WALL TO REMAIN
- EXISTING NON BEARING PARTITION TO REMAIN
- DENOTE SAME LEVEL AT BOTH SIDES OPENINGS

REVISIONS

NO.	DATE

EMILIANO OROZCO P.E.
817 SW 122 AVENUE
MIAMI, FLORIDA 33184
PHONE: (786) 715-7125
emilianoorozco90@yahoo.com

PROPOSED TENANT SPACE TO BE USED LIKE ANIMAL CLINIC

ANIMAL CLINIC
2134 SW 67 AVENUE
MIAMI, FL 33155

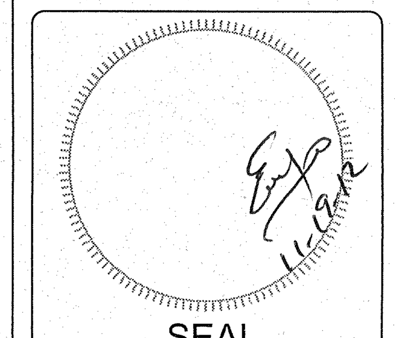

SEAL

DATE 06-08-2012
SCALE AS SHOWN
DESIGNED E.O.
DRAWN E.O.
CHECKED

DRAWING NO.
A-2

SHEET 1 OF