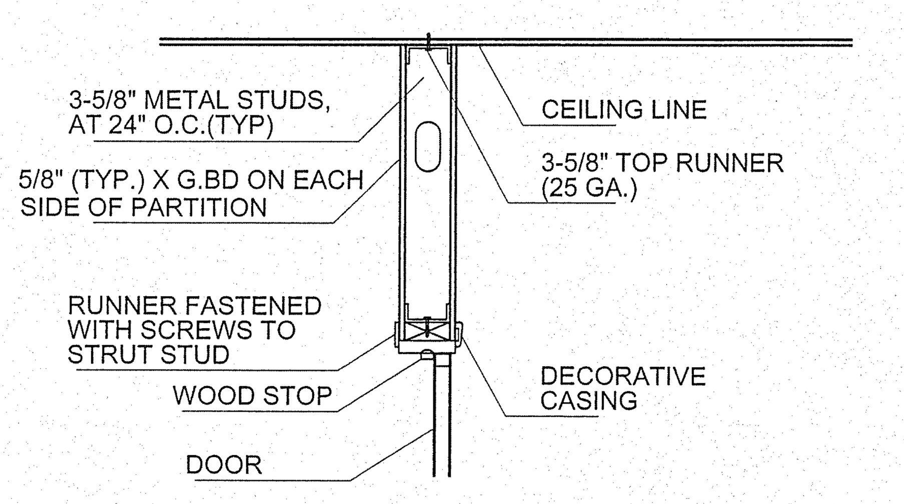

WOOD DOOR HEAD

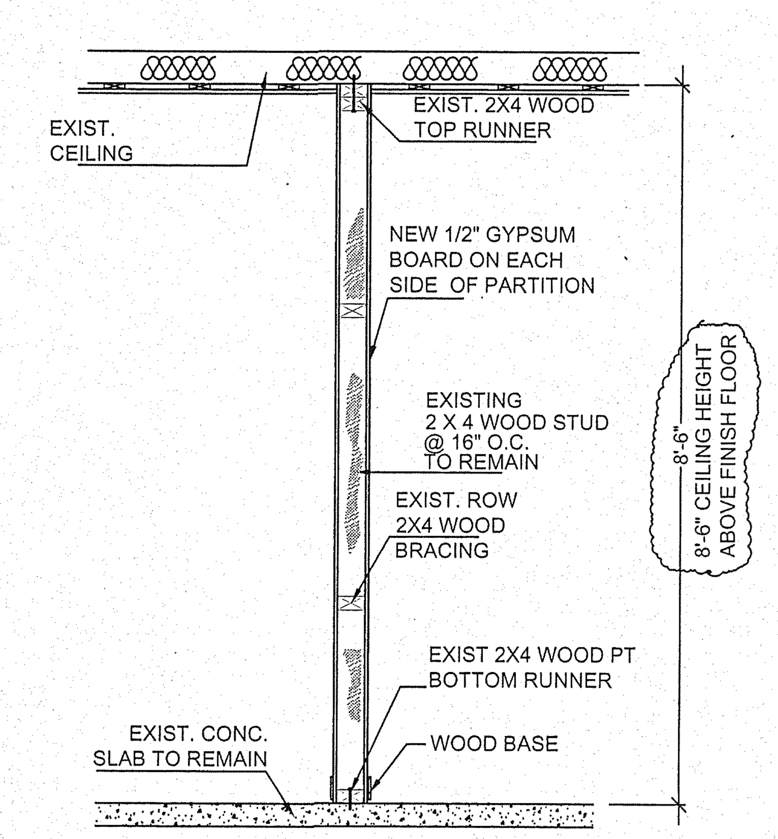

NON-RATED
A NON-BEARING PARTITION (TYP.)
SCALE: NTS.

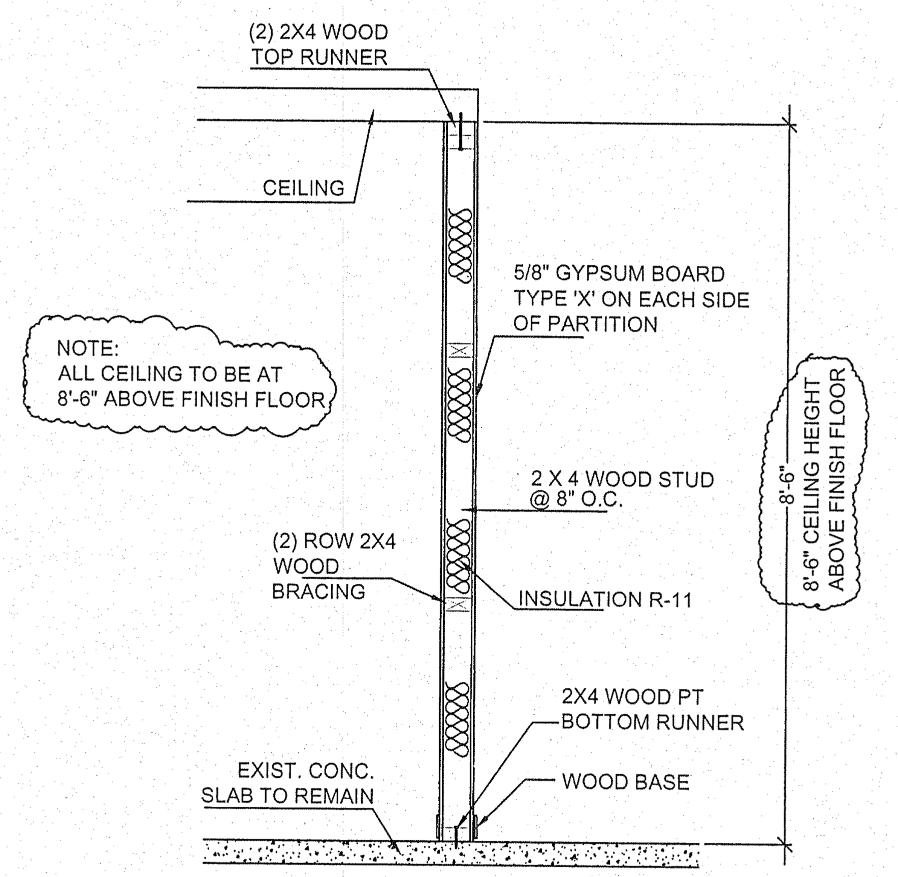

1- HR. FIRE RATED
NON BEARING PARTITION
B UL - U337
SCALE: NTS.

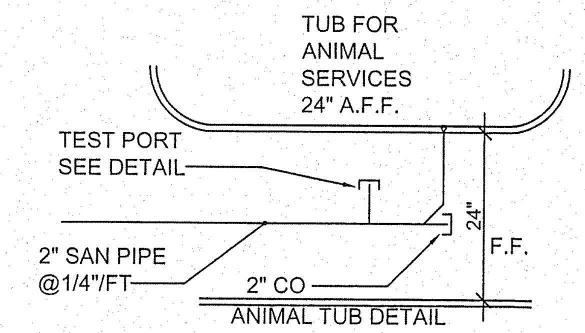

ANIMAL TUB DETAIL
N.T.S.

TEST PORT LOCATED AT EACH FIXTUR UNIT. SEE P-1

X-RAY EQUIPMENT SPECS:

DIDGITAL-NO WET SYSTEM FOR X-RAY ROOM
Intel Xeon inside. The new range of IBM System x® servers with the latest Intel® Xeon® E5-2600 and E5-2400 series processors is designed to address the distinctive demands of your business. Incredibly flexible and easy to scale for future requirements, these servers can be further customized to best suit your unique business requirements.
The new family of IBM System x servers offers:
Industry-leading reliability1 along with up to 84% performance improvement over previous generation 2-socket systems2
Integrated management with remote access capabilities and security
Expanded scalability with up to 768 GB memory3 and up to 24 TB internal storage
High-speed networking with 10 Gb Ethernet support as well as legacy 1 Gb support

Derm Requirements. Clinic operation:

A:

Evaluation of the animal like dogs, cats. Medical treatment to be organized After evaluation: first help, recipe & out. Hospitalization and/o surgery

The Procedure:

Every test is done in small glassware: fecal, urine, and blood tests, after completion of test, all is thrown away in plastic container (size 5 gallon). This is collected by the company name Stercycle, after the content in the lab glassware is emptied in plastic container then the glassware is washed in the sink.

Sink use:

Only use for washing hands and lab glassware rinse after emptied in plastic container to be disposed of by Stercycle.

Container side:

5 gallons to store fresh chemicals (reagent, etc) and lab waste, all container plastic storage indoor.

B:

Laboratory Use:

This is where the fecal, urine, and blood test are performed.

C:

See sterilizer, autoclave, dyer in laundry area and disposal area (tub) to disinfect all products before throw-out. 55 gall container not to be proposed. Mechanical system is enough to remove and cleaning remaining gases. Stainless steel container to be provided at each room to waste. See plans

D:

Not wet system in the x-ray room. See dry system specs. On plans.

Sink, tubs, lavatories and fixture units to be provided with sampling port as shown on drawings.

E:

No wastewater in contact with chemicals will be discharged into sanitary sewer

Treatment of the products to disposal shall be controlled by local authorities having Jurisdiction and federal state regulations with separate inspections

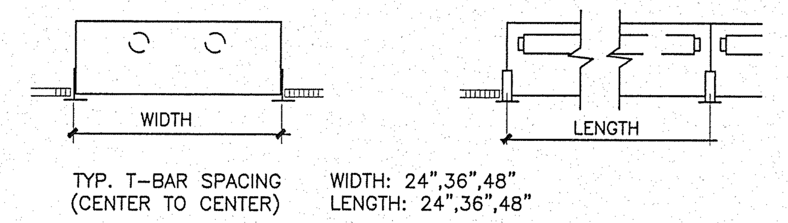

Light Fix. @ T-Bar
3"=1'-0"

CEILING DETAILS
N.T.S.

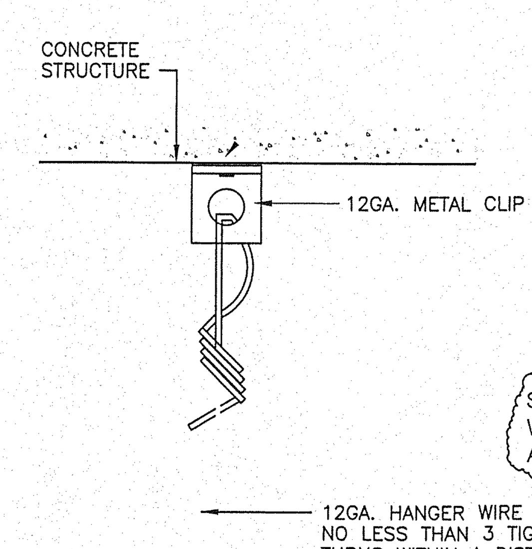

NOTE:
WHEN INSTALLING DRILLED-IN ANCHORS AND/OR POWDER DRIVEN PINS IN EXISTING NON-PRESTRESSED REINFORCED CONCRETE, USE CARE AND CAUTION TO AVOID CUTTING OR DAMAGING THE EXISTING REINFORCING BARS, MAINTAIN 1" CLEAR BETWEEN ANCHOR AND REINFORCING.

VERTICAL HANGER WIRE
3"=1'-0"

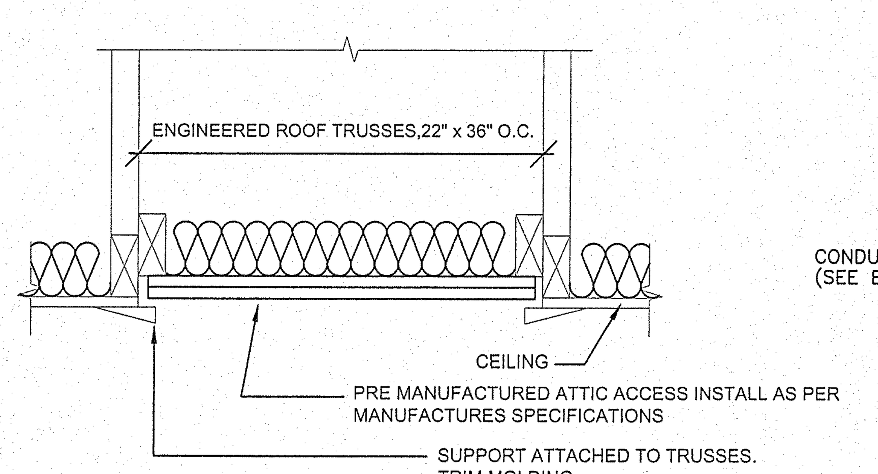

CEILING ACCESS HATCH

N.T.S. (TYP.)

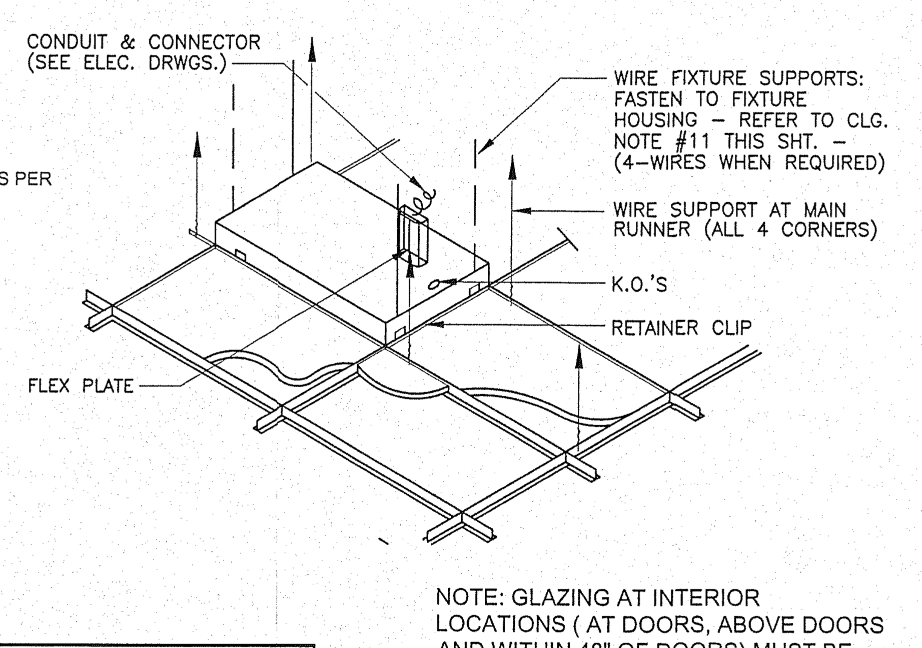

NOTE: GLAZING AT INTERIOR LOCATIONS (AT DOORS, ABOVE DOORS AND WITHIN 48" OF DOORS) MUST BE CATEGORY II SAFETY GLAZING AS PER FBC 2411.6.4

EXISTING DOOR SCHEDULE

MARK	DESCRIPTION	SIZE W	SIZE H	SIZE T	MATERIAL DOOR	MATERIAL FRAME	REMARKS
1	SWING DOOR	2'-10"	6'-8"		GLASS/MTL	MTL	EXT.DOOR
2	GLASS DOOR	6'-0"	6'-8"		GLASS/MTL	MTL	EXT .DOOR
3	SWING DOOR	2'-10"	6'-8"		GLASS/MTL	MTL	INT .DOOR
4	GLASS DOOR	2'-10"	6'-8'		GLASS/MTL	MTL	XRY .DOOR*
5	LOUVER DOOR	2'-10"	6'-8'		GLASS/MTL	MTL	INT .DOOR

SAFETY NOTES FOR DOORS
(CLOSETS AND BATHROOMS) NFPA 101 - 1994 CHAPTER-21 (21-2.4.3) EVERY CLOSET DOOR LATCH SHALL BE SUCH THAT CHILDREN CAN OPEN THE DOOR FROM INSIDE THE CLOSET (21-2.4.4) EVERY BATHROOM DOOR LOCK SHALL BE DESIGNED TO PERMIT THE OPENING OF THE LOCKED DOOR FROM THE EGRESS DOOR TYPE OF LOCK OR LATCH MUST COMPLY W/FBC R311.4.4. OUTSIDE IN AN EMERGENCY.

* XRAY DOOR TO BE INTERIOR PROTECTED WITH 1/16" LEAD AS SHOWN ON DETAILS XRAY ROOM

NOTE: GLAZING AT INTERIOR LOCATIONS (AT DOORS, ABOVE DOORS AND WITHIN 48" OF DOORS) MUST BE CATEGORY II SAFETY GLAZING AS PER FBC 2411.6.4

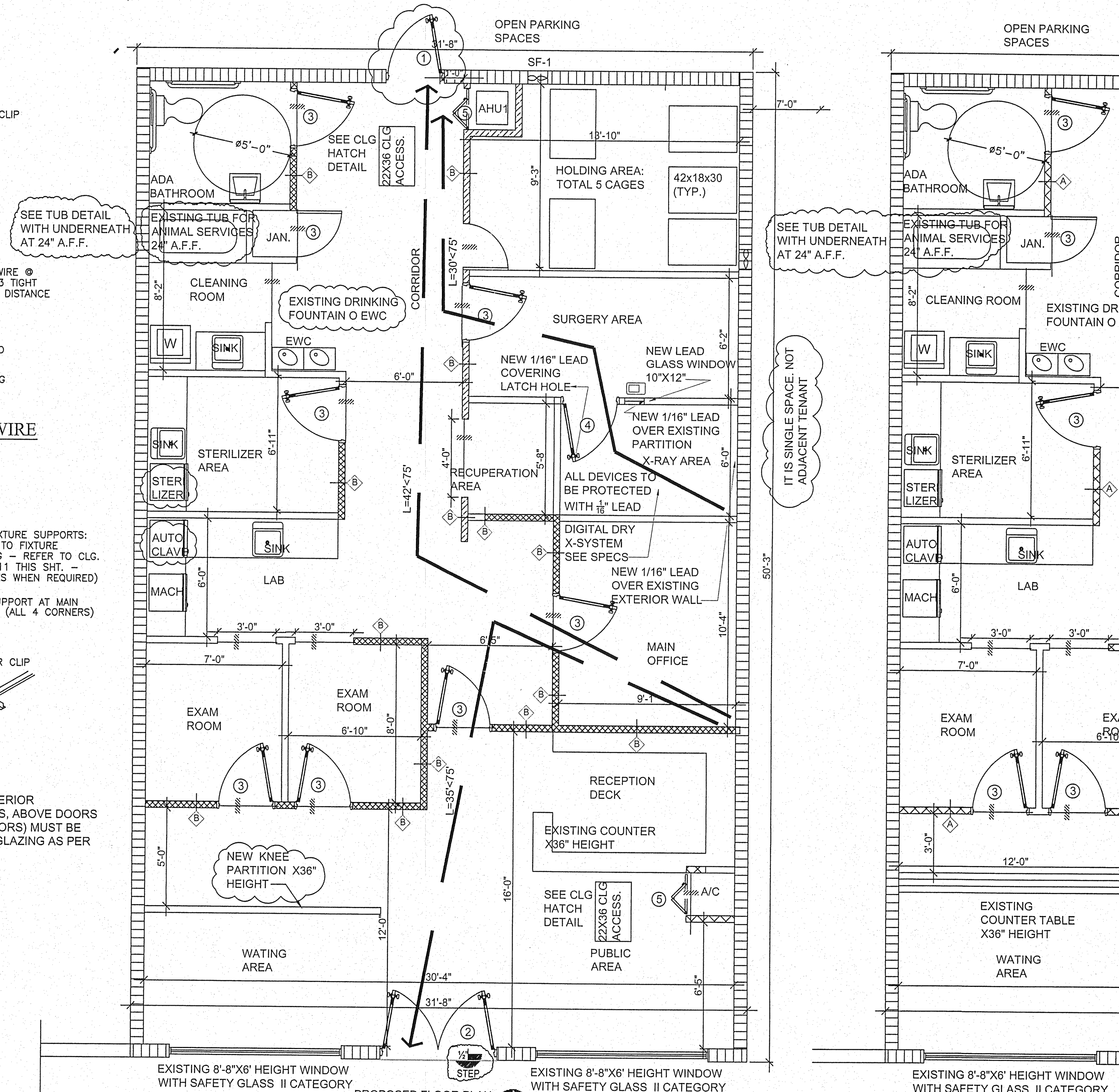

PROPOSED FLOOR PLAN
SCALE :1/4"=1'-0"

NO ANY SITE WORK BEING DONE

NOT MICROFILM WERE GOT

NO ANY SITE WORK BEING DONE

LEGEND
EXIT SIGN & EMERGENCY LIGHTS COMBO
A — DENOTE 4" EXISTING NON BEARING PARTITION TO BE REPLACED BY ONE HOUR FIRE RATED PARTITION
B — DENOTE 4" NEW NON BEARING PARTITION ONE HOUR FIRE RATED PARTITION
C — DENOTE 4" EXISTING NON BEARING PARTITION TO REMAIN

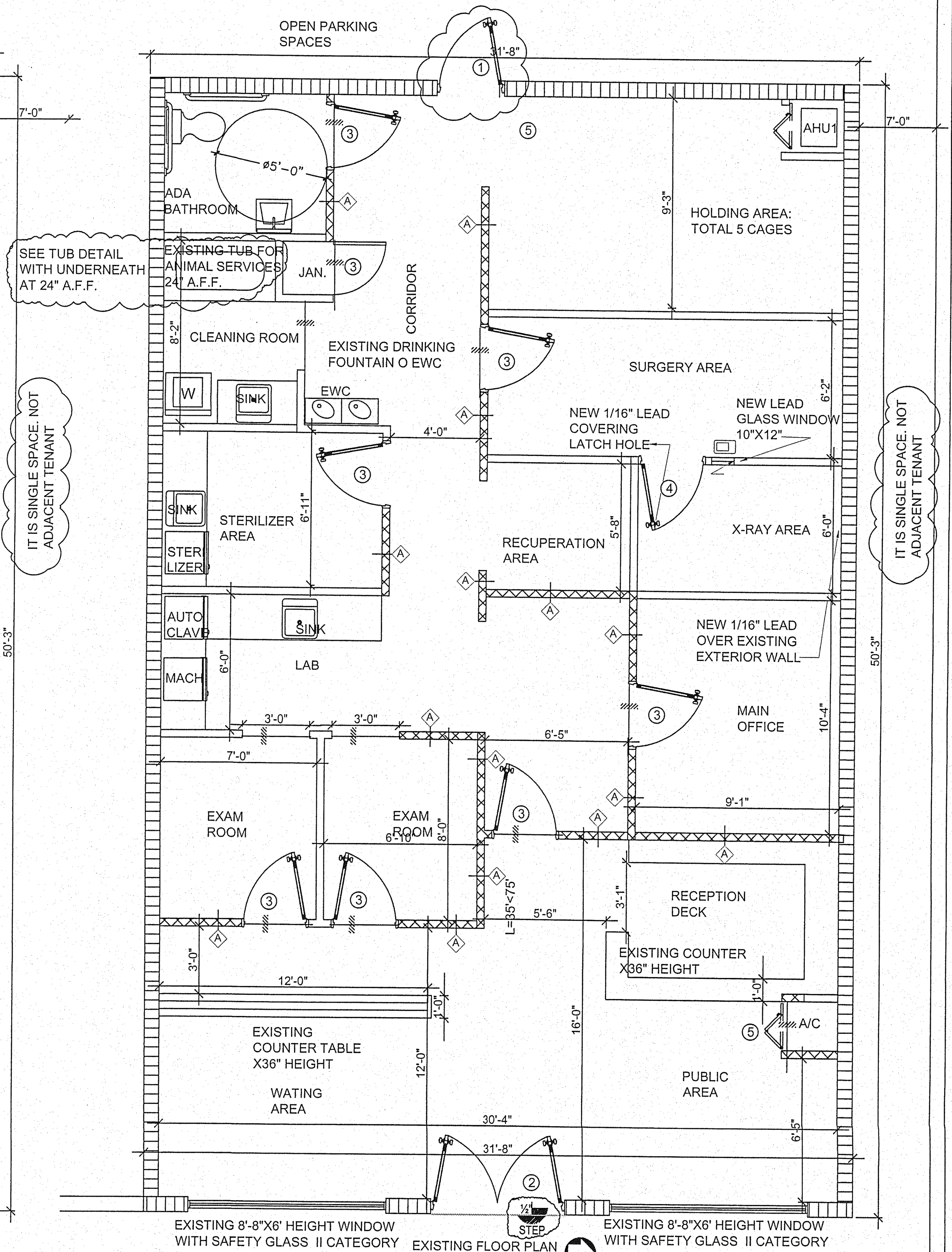

EXISTING FLOOR PLAN
SCALE :1/4"=1'-0"

LEGEND
DENOTE 4" EXISTING NON BEARING PARTITION TO BE REPLACED BY ONE HOUR FIRE RATED PARTITION
DENOTE 4" NEW NON BEARING PARTITION ONE HOUR FIRE RATED. SEE UL337
EXISTING CONCRETE WALL TO REMAIN
EXISTING NON BEARING PARTITION TO REMAIN
DENOTE SAME LEVEL AT BOTH SIDES OPENINGS

REVISIONS	
NO.	DATE

EMILIANO OROZCO P.E.
817 SW 122 AVENUE
MIAMI, FLORIDA 33184
PHONE: (786) 715-7125
emilianoorozco90@yahoo.com

PROPOSED TENANT SPACE TO BE USED LIKE ANIMAL CLINIC

ANIMAL CLINIC
2134 SW 67 AVENUE
MIAMI, FL 33155

SEAL

DATE 11-28-2012
SCALE AS SHOWN
DESIGNED E.O.
DRAWN E.O.
CHECKED
DRAWING NO. A-2
SHEET 1 OF

Miami Dade County Department of Regulatory And Economic Resources - Job Copy
0000725367 - 1/8/2013 11:23:30 AM
A-2-12102012.PDF

Examiner	Date Time Stamp	Disp.	Trade	Stamp Name
Manuel Diaz-Villamil	12/11/2012 2:27:48 PM	A	DERM	Approved Industrial
Houshang Khabari	12/13/2012 4:32:48 PM	A	BLDG	Approved