FORM 405-10

FLORIDA ENERGY EFFICIENCY CODE FOR BUILDING CONSTRUCTION

Florida Department of Business and Professional Regulation - Residential Performance Method

Project Name:	llcellawish2	Builder Name:	
Street:	2419 nw 99 st	Permit Office.	
City, State, Zip:	miami , FL , 33147-	Permit Number:	
Owner:	ellawish llc 2	Jurisdiction:	231000
Design Location:	FL, KENDALL_TAMIA_MIAMI		

1. New construction or existing		Addition
2. Single family or multiple family		Single-family
3 Number of units, if multiple family		1
4 Number of Bedrooms(Bedrms In Addition)		3(0)
5. Is this a worst case?		No
6. Conditioned floor area above grade (ft²)		1976
Conditioned floor area below grade (ft²)		0
7. Windows(161.0 sqft)	Description	Area
a. U-Factor:	Sgl, U=1.30	161.00 ft²
SHGC:	SHGC=0.35	
b. U-Factor:	N/A	ft²
SHGC:		
c. U-Factor:	N/A	ft²
SHGC.		
d U-Factor:	N/A	ft²
SHGC:		
Area Weighted Average Overhang Depth		2.000 ft
Area Weighted Average SHGC:		0.350

8. Floor Types (1976.0 sqft)	Insulation	Area
a. Slab-On-Grade Edge Insulation	R=0.0	1976.00 ft²
b. N/A	R=	ft²
c N/A	R=	ft²

9. Wall Types (1696.0 sqft.)	Insulation	Area
a. Concrete Block - Int Insul, Exterior	R=5.0	1696 00 ft²
b. N/A	R=	ft²
c N/A	R=	ft²
d. N/A	R=	ft²

10. Ceiling Types (1976.0 sqft.)	Insulation	Area
a. Under Attic (Vented)	R=19.0	1976.00 ft²
b. N/A	R=	ft²
c. N/A	R=	ft²

11. Ducts	R	ft²
a. Sup: Attic, Ret. Attic, AH: Main	6	395.2

12. Cooling systems	kBtu/hr	Efficiency
a Central Unit	42.0	SEER.17 00

13. Heating systems	kBtu/hr	Efficiency
a. Electric Strip Heat	25.0	COP:1 00

14. Hot water systems - Replacement equipment
a. Electric Tankless Cap: 1 gallons
EF: 0 920
b. Conservation features
None

15. Credits Pstat

Glass/Floor Area: 0.081

Total Proposed Modified Loads: 32.15
Total Standard Reference Loads: 40.12

PASS

I hereby certify that the plans and specifications covered by this calculation are in compliance with the Florida Energy Code.

PREPARED BY: [signature]
DATE. 7/31/15

I hereby certify that this building, as designed, is in compliance with the Florida Energy Code.

OWNER/AGENT:
DATE.

Review of the plans and specifications covered by this calculation indicates compliance with the Florida Energy Code. Before construction is completed this building will be inspected for compliance with Section 553.908 Florida Statutes.

BUILDING OFFICIAL:
DATE:

Miami Dade County Department of Regulatory And Economic Resources - Job Copy
0000331469 - 7/31/2016 2:40:16 PM
GENERAL01-08102015.pdf

Compliance requires completion of Florida Air Barrier and Insulation Inspection Checklist

Examiner	Date Time Stamp	Disp.	Trade	Stamp Name
Gloria Garcia	5/5/2016 10:20:11 AM	A	MECH	Approved

PROJECT

Title:	llcellawish2	Bedrooms:	3	Address Type:	Street Address
Building Type:	User	Conditioned Area:	1976	Lot #	
Owner:	ellawish llc 2	Total Stories:	1	Block/SubDivision:	
# of Units:	1	Worst Case:	No	PlatBook:	
Builder Name.		Rotate Angle:	0	Street:	2419 nw 99 st
Permit Office:		Cross Ventilation:		County:	dade
Jurisdiction:	231000	Whole House Fan.		City, State, Zip:	miami ,
Family Type.	Single-family				FL , 33147-
New/Existing:	Addition				
Comment:					

CLIMATE

√	Design Location	TMY Site	IECC Zone	Design Temp 97.5 %	Design Temp 2.5 %	Int Design Temp Winter	Int Design Temp Summer	Heating Degree Days	Design Moisture	Daily Temp Range
_____	FL, KENDALL_TAMIA_MI	FL_MIAMI_KENDALL_TA	1	48	90	70	75	238.5	59	Low

BLOCKS

Number	Name	Area	Volume
1	Block1	1976	15808

SPACES

Number	Name	Area	Volume	Kitchen	Occupants	Bedrooms	Infil ID	Finished	Cooled	Heated
1	Main	1976	15808	Yes	8	3	1	Yes	Yes	Yes

FLOORS

√	#	Floor Type	Space	Perimeter	R-Value	Area		Tile	Wood	Carpet
_____	1	Slab-On-Grade Edge Insulatio	Main	212 ft	0	1976 ft²	----	0	0	1

ROOF

√	#	Type	Materials	Roof Area	Gable Area	Roof Color	Solar Absor	SA Tested	Emitt	Emitt Tested	Deck Insul	Pitch (deg)
_____	1	Hip	Composition shingles	2036 ft²	0 ft²	Medium	0.96	No	0.9	No	0	14

ATTIC

√	#	Type	Ventilation	Vent Ratio (1 in)	Area	RBS	IRCC
_____	1	Full attic	Vented	300	1976 ft²	N	N

CEILING

√	#	Ceiling Type	Space	R-Value	Area	Framing Frac	Truss Type
_____	1	Under Attic (Vented)	Main	19	1976 ft²	0.11	Wood

Miami-Dade County Department of Regulatory And Economic Resources – Job Copy
0000331469 – 7/21/2016 2:19:15 PM
GENERAL01-08102015.pdf

Examiner	Date Time Stamp	Disp.	Trade	Stamp Name
Gloria Garcia	5/5/2016 10:20:11 AM	A	MECH	Approved

WALLS

√	#	Ornt	Adjacent To	Wall Type	Space	Cavity R-Value	Width Ft In	Height Ft In	Area	Sheathing R-Value	Framing Fraction	Solar Absor.	Below Grade%
____	1	N	Exterior	Concrete Block - Int Insul	Main	5	60	8	480.0 ft²		0	0 75	0
____	2	S	Exterior	Concrete Block - Int Insul	Main	5	60	8	480.0 ft²		0	0.75	0
____	3	E	Exterior	Concrete Block - Int Insul	Main	5	46	8	368.0 ft²		0	0 75	0
____	4	W	Exterior	Concrete Block - Int Insul	Main	5	46	8	368.0 ft²		0	0.75	0

DOORS

√	#	Ornt	Door Type	Space	Storms	U-Value	Width Ft In	Height Ft In	Area
_____	1	S	Insulated	Main	Metal	.46	3	7	21 ft²
_____	2	E	Insulated	Main	Metal	.46	3	7	21 ft²
_____	3	W	Wood	Main	Metal	.46	3	7	21 ft²

WINDOWS

Orientation shown is the entered, Proposed orientation.

√	#	Ornt	Wall ID	Frame	Panes	NFRC	U-Factor	SHGC	Area	Overhang Depth	Overhang Separation	Int Shade	Screening
_____	1	N	1	Metal	Single (Tinted)	Yes	1.3	0.35	25 0 ft²	2 ft 0 in	5 ft 0 in	Roller shade	Interior 5
_____	2	S	2	Metal	Single (Tinted)	Yes	1.3	0.35	52 0 ft²	2 ft 0 in	5 ft 0 in	Roller shade	Interior 5
_____	3	S	2	Metal	Single (Tinted)	Yes	1.3	0.35	32.0 ft²	2 ft 0 in	5 ft 0 in	Roller shade	Interior 5
_____	4	S	2	Metal	Single (Tinted)	Yes	1.3	0.35	52.0 ft²	2 ft 0 in	5 ft 0 in	Roller shade	Interior 5

INFILTRATION

#	Scope	Method	SLA	CFM 50	ELA	EqLA	ACH	ACH 50
1	Wholehouse	Best Guess	.0005	2591.5	142.27	267.56	.345	9.8363

HEATING SYSTEM

√	#	System Type	Subtype	Efficiency	Capacity	Block	Ducts
_____	1	Electric Strip Heat	None	COP: 1	25 kBtu/hr	1	sys#1

COOLING SYSTEM

√	#	System Type	Subtype	Efficiency	Capacity	Air Flow	SHR	Block	Ducts
_____	1	Central Unit	None	SEER: 17	42 kBtu/hr	1260 cfm	0.75	1	sys#1

HOT WATER SYSTEM

√	#	System Type	SubType	Location	EF	Cap	Use	SetPnt	Conservation
_____	1	Electric	Tankless	Main	0.92	1 gal	60 gal	120 deg	None

Miami Dade County Department of Regulatory And Economic Resources – Job Copy
0000331469 – 7/21/2016 2:19:15 PM
GENERAL01-08102015.pdf

Examiner	Date Time Stamp	Disp.	Trade	Stamp Name
Gloria Garcia	5/5/2016 10:20:11 AM	A	MECH	Approved

SOLAR HOT WATER SYSTEM

√	FSEC Cert #	Company Name	System Model #	Collector Model #	Collector Area	Storage Volume	FEF
_____	None	None			ft²		

DUCTS

√	#	---- Supply ---- Location	R-Value	Area	---- Return ---- Location	Area	Leakage Type	Air Handler	CFM 25 TOT	CFM25 OUT	QN	RLF	HVAC # Heat	Cool
_____	1	Attic	6	395.2 ft	Attic	98.8 ft²	Default Leakage	Main	(Default)	(Default)			1	1

TEMPERATURES

Programable Thermostat: Y

Ceiling Fans:

	Jan	Feb	Mar	Apr	May	Jun	Jul	Aug	Sep	Oct	Nov	Dec
Cooling	[ ]	[ ]	[ ]	[ ]	[ ]	[X]	[X]	[X]	[X]	[ ]	[ ]	[ ]
Heating	[X]	[X]	[X]	[ ]	[ ]	[ ]	[ ]	[ ]	[ ]	[ ]	[X]	[X]
Venting	[ ]	[ ]	[X]	[X]	[ ]	[ ]	[ ]	[ ]	[ ]	[X]	[X]	[ ]

Thermostat Schedule: HERS 2006 Reference

Schedule Type		Hours 1	2	3	4	5	6	7	8	9	10	11	12
Cooling (WD)	AM	78	78	78	78	78	78	78	78	80	80	80	80
	PM	80	80	78	78	78	78	78	78	78	78	78	78
Cooling (WEH)	AM	78	78	78	78	78	78	78	78	78	78	78	78
	PM	78	78	78	78	78	78	78	78	78	78	78	78
Heating (WD)	AM	66	66	66	66	66	68	68	68	68	68	68	68
	PM	68	68	68	68	68	68	68	68	68	68	66	66
Heating (WEH)	AM	66	66	66	66	66	68	68	68	68	68	68	68
	PM	68	68	68	68	68	68	68	68	68	68	66	66

Miami Dade County Department of Regulatory And Economic Resources – Job Copy
0000331469 – 7/21/2016 2:19:15 PM
GENERAL01-08102015.pdf

Examiner	Date Time Stamp	Disp.	Trade	Stamp Name
Gloria Garcia	5/5/2016 10:20:11 AM	A	MECH	Approved

FORM 405-10

Florida Code Compliance Checklist

Florida Department of Business and Professional Regulations
Residential Whole Building Performance Method

ADDRESS: 2419 nw 99 st miami, FL, 33147-	PERMIT #:

MANDATORY REQUIREMENTS SUMMARY - See individual code sections for full details.

COMPONENT	SECTION	SUMMARY OF REQUIREMENT(S)	CHECK
Air leakage	402.4	To be caulked, gasketed, weatherstripped or otherwise sealed. Recessed lighting IC-rated as meeting ASTM E 283. Windows and doors = 0.30 cfm/sq.ft. Testing or visual inspection required. Fireplaces: gasketed doors & outdoor combustion air. Must complete envelope leakage report or visually verify Table 402.4.2.	✓
Thermostat & controls	403.1	At least one thermostat shall be provided for each separate heating and cooling system. Where forced-air furnace is primary system, programmable thermostat is required. Heat pumps with supplemental electric heat must prevent supplemental heat when compressor can meet the load.	✓
Ducts	403.2.2 403.3.3	All ducts, air handlers, filter boxes and building cavities which form the primary air containment passageways for air distribution systems shall be considered ducts or plenum chambers, shall be constructed and sealed in accordance with Section 503.2.7.2 of this code. Building framing cavities shall not be used as supply ducts.	✓
Water heaters	403.4	Heat trap required for vertical pipe risers. Comply with efficiencies in Table 403.4.3.2. Provide switch or clearly marked circuit breaker (electric) or shutoff (gas). Circulating system pipes insulated to = R-2 + accessible manual OFF switch.	✓
Mechanical ventilation	403.5	Homes designed to operate at positive pressure or with mechanical ventilation systems shall not exceed the minimum ASHRAE 62 level. No make-up air from attics, crawlspaces, garages or outdoors adjacent to pools or spas.	N/A
Swimming Pools & Spas	403.9	Pool pumps and pool pump motors with a total horsepower (HP) of = 1 HP shall have the capability of operating at two or more speeds. Spas and heated pools must have vapor-retardant covers or a liquid cover or other means proven to reduce heat loss except if 70% of heat from site-recovered energy. Off/timer switch required. Gas heaters minimum thermal efficiency=78% (82% after 4/16/13). Heat pump pool heaters minimum COP= 4.0.	N/A
Cooling/heating equipment	403.6	Sizing calculation performed & attached. Minimum efficiencies per Tables 503.2.3. Equipment efficiency verification required. Special occasion cooling or heating capacity requires separate system or variable capacity system. Electric heat >10kW must be divided into two or more stages.	✓
Ceilings/knee walls	405.2.1	R-19 space permitting.	✓

Miami Dade County Department of Regulatory And Economic Resources - Job Copy
0000331469 - 7/21/2016 2:19:15 PM
GENERAL01-08102015.pdf
Examiner Date/Time Stamp Disp. Trade Stamp Name
Gloria Garcia 5/5/2016 10:20:11 AM A MECH Approved

ENERGY PERFORMANCE LEVEL (EPL) DISPLAY CARD

ESTIMATED ENERGY PERFORMANCE INDEX* = 80

The lower the EnergyPerformance Index, the more efficient the home.

2419 nw 99 st, miami, FL, 33147-

1. New construction or existing	Addition
2. Single family or multiple family	Single-family
3. Number of units, if multiple family	1
4. Number of Bedrooms	3(0)
5. Is this a worst case?	No
6. Conditioned floor area (ft²)	1976

7. Windows**	Description	Area
a. U-Factor:	Sgl, U=1.30	161.00 ft²
SHGC:	SHGC=0.35	
b. U-Factor:	N/A	ft²
SHGC:		
c. U-Factor:	N/A	ft²
SHGC:		
d. U-Factor:	N/A	ft²
SHGC:		

Area Weighted Average Overhang Depth: 2.000 ft.
Area Weighted Average SHGC: 0.350

8. Floor Types	Insulation	Area
a. Slab-On-Grade Edge Insulation	R=0.0	1976.00 ft²
b. N/A	R=	ft²
c. N/A	R=	ft²

9. Wall Types	Insulation	Area
a Concrete Block - Int Insul, Exterior	R=5.0	1696.00 ft²
b. N/A	R=	ft²
c. N/A	R=	ft²
d N/A	R=	ft²

10. Ceiling Types	Insulation	Area
a. Under Attic (Vented)	R=19.0	1976 00 ft²
b. N/A	R=	ft²
c. N/A	R=	ft²

11. Ducts	R	ft²
a Sup: Attic, Ret: Attic, AH: Main	6	395.2

12. Cooling systems	kBtu/hr	Efficiency
a Central Unit	42.0	SEER:17.00

13. Heating systems	kBtu/hr	Efficiency
a. Electric Strip Heat	25 0	COP·1 00

14. Hot water systems - Replacement equipment
a Electric — Cap: 1 gallons, EF: 0.92
b. Conservation features
None

15. Credits — Pstat

I certify that this home has complied with the Florida Energy Efficiency Code for Building Construction through the above energy saving features which will be installed (or exceeded) in this home before final inspection. Otherwise, a new EPL Display Card will be completed based on installed Code compliant features.

Builder Signature: BY OWNER Date: 7/30/15

Address of New Home: 2419 NW 99 ST. City/FL Zip: MIAMI FL 33147

GREAT SEAL OF THE STATE OF FLORIDA · IN GOD WE TRUST

*Note: This is not a Building Energy Rating. If your Index is below 70, your home may qualify for energy efficient mortgage (EEM) incentives if you obtain a Florida EnergyGauge Rating. Contact the EnergyGauge Hotline at (321) 638-1492 or see the EnergyGauge web site at energygauge.com for information and a list of certified Raters. For information about the Florida Building Code, Energy Conservation, contact the Florida Building Commission's support staff.

**Label required by Section 303.1.3 of the Florida Building Code, Energy Conservation, if not DEFAULT.

Miami-Dade County Department of Regulatory and Economic Resources - Job Card
0000331469 - 7/21/2016 2:19:15 PM
GENERAL01-08102016.pdf

Examiner	Date Time Stamp	Disp.	Trade	Stamp Name
Gloria Garcia	5/5/2016 10:20:11 AM	A	MECH	Approved

Residential System Sizing Calculation

Summary

ellawish llc 2
2419 nw 99 st
miami, FL 33147-

Project Title:
llcellawish2

7/25/2015

Location for weather data: Kendall-Tamiami, FL - Defaults: Latitude(25.65) Altitude(7 ft.) Temp Range(L)					
Humidity data: Interior RH (50%) Outdoor wet bulb (78F) Humidity difference(59gr.)					
Winter design temperature(MJ8 99%)	49	F	Summer design temperature(MJ8 99%)	91	F
Winter setpoint	70	F	Summer setpoint	75	F
Winter temperature difference	21	F	Summer temperature difference	16	F
Total heating load calculation	**21013**	**Btuh**	**Total cooling load calculation**	**40932**	**Btuh**
Submitted heating capacity	% of calc	Btuh	Submitted cooling capacity	% of calc	Btuh
Total (Electric Strip Heat)	119.0	25000	Sensible (SHR = 0.75)	121.2	31500
			Latent	70.2	10500
			Total	102.6	42000

WINTER CALCULATIONS

Winter Heating Load (for 1976 sqft)

Load component			Load	
Window total	161	sqft	4395	Btuh
Wall total	1472	sqft	4067	Btuh
Door total	63	sqft	609	Btuh
Ceiling total	1976	sqft	2034	Btuh
Floor total	1976	sqft	5253	Btuh
Infiltration	0	cfm	0	Btuh
Duct loss			4655	Btuh
Subtotal			**21013**	**Btuh**
Ventilation	0	cfm	0	Btuh
TOTAL HEAT LOSS			**21013**	**Btuh**

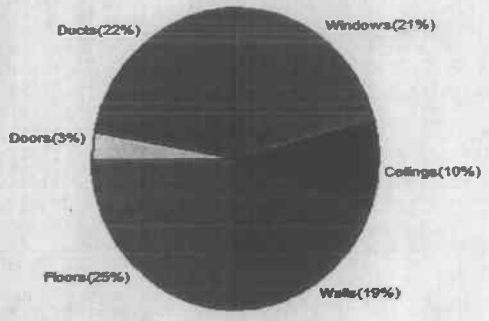

SUMMER CALCULATIONS

Summer Cooling Load (for 1976 sqft)

Load component			Load	
Window total	161	sqft	3789	Btuh
Wall total	1472	sqft	3099	Btuh
Door total	63	sqft	644	Btuh
Ceiling total	1976	sqft	4359	Btuh
Floor total			0	Btuh
Infiltration	290	cfm	5100	Btuh
Internal gain			4240	Btuh
Duct gain			4753	Btuh
Sens. Ventilation	0	cfm	0	Btuh
Blower Load			0	Btuh
Total sensible gain			**25983**	**Btuh**
Latent gain(ducts)			1724	Btuh
Latent gain(infiltration)			11625	Btuh
Latent gain(ventilation)			0	Btuh
Latent gain(latent occupants/other)			1600	Btuh
Total latent gain			14949	Btuh
TOTAL HEAT GAIN			40932	Btuh

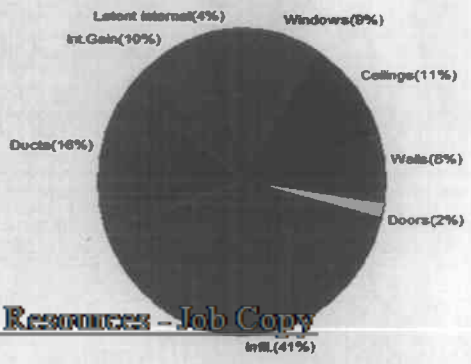

Miami Dade County Department of Regulatory And Economic Resources – Job Copy
0000331459 - 7/21/2016 2:19:15 PM
GENERAL01_08102015.pdf
Examiner Date Time Stamp Disp. Trade Stamp Name
Gloria Garcia 5/5/2016 10:20:11 AM A MECH Approved
Powered by MANUAL J

EnergyGauge® System Sizing
PREPARED BY: FERMIN A. MARTINEZ P.E
DATE: 7/30/15

FERMIN A.MARTINEZ
CONSULTING ENGINEER
FL P.E. No 19363
8340 SW 65 AVENUE UNIT 3
MIAMI, FL. 33143
TEL. (305) 298-3216

JOB: AS BUILT PLANS FOR DEMOLITION/LEGALIZATION OF:
OWNER: ELLAWISH LLC II
ADRESS: 2419 N.W. 99th STREET
MIAMI, FL. 33147

STRUCTURAL CALCULATIONS

INDEX OF CONTENT:

1. WIND LOAD.
   Page: 1 thru 11.

2. ROOF LOAD.
   Page: 12 thru 20.

3. RAFTER DESIGN.
   Page: 21 thru 24.

4. REINFORCED MASONRY.
   Page: 25 thru 28.

5. FOUNDATION DESIGN.
   Page: 29 thru 30.

6. PRODUCT CONTROL NOTICE ACCEPTANCE. (NOA).
   Page: 31 thru 41.

Miami Dade County Department of Regulatory And Economic Resources - Job Copy
0000331469 - 7/21/2016 2:19:15 PM
GENERAL01-08102015.pdf

Examiner	Date Time Stamp	Disp.	Trade	Stamp Name
Gloria Garcia	5/5/2016 10:20:11 AM	A	MECH	Approved

FERMIN A. MARTINEZ
LICENSE
No. 19363
STATE OF FLORIDA
PROFESSIONAL ENGINEER

Project Name: ELLAWISH LLC II

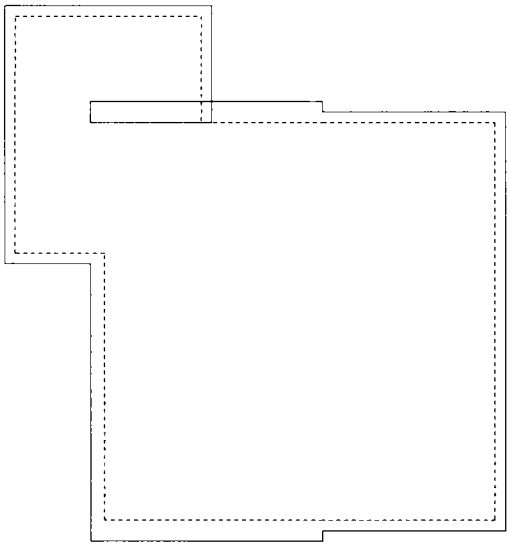

Location: 2419 N.W. 99th STREET MIAMI, FL. 33147

By: FERMIN A. MARTINEZ, FL. P.E. No 19363

Start Date: 7/16/2015

Comments: WIND CALCULATIONS.

Miami Dade County Department of Regulatory And Economic Resources - Job Copy
0000331469 - 7/21/2016 2:19:15 PM
GENERAL01-08102015.pdf

Examiner	Date Time Stamp	Disp.	Trade	Stamp Name
Gloria Garcia	5/5/2016 10:20:11 AM	A	MECH	Approved

..\0-1-2015\15-57ELLAWISH LLC\WIND.wls

Velocity Pressure Calculations

July 17, 2015 2/41

ASCE7-10

Entered Data

Exposure: C

$z = 12.8$ ft

Case = 1

$V = 175$ mph

Structure Type: Building - MWFRS, C&C, Arched Roof

Constants

$\alpha = 9.5$

$z_g = 900$ ft

Calculations

$$K_z = 2.01\left[\frac{15}{z_g}\right]^{\frac{2}{\alpha}} = 0.85$$

$$K_{zt} = 1$$

$$K_d = 0.85$$

$$q_z = .00256 K_z K_{zt} K_d V^2 = 56.6 \text{ psf}$$

Miami Dade County Department of Regulatory And Economic Resources - Job Copy
0000331469 - 7/21/2016 2:19:15 PM
GENERAL01-08102015.pdf

Examiner	Date Time Stamp	Disp.	Trade	Stamp Name
Gloria Garcia	5/5/2016 10:20:11 AM	A	MECH	Approved

WLS4 -- [1.10] Copyright © 2020 SDG, Inc.

Local Information

Wind Dir.	Exposure
1	C
2	C
3	C
4	C

Basic Wind Speed: 175 mph

Topography: None

Optional Factors

This project uses load combinations from ASCE 7.

Miami Dade County Department of Regulatory And Economic Resources - Job Copy
0000331469 - 7/21/2016 2:19:15 PM
GENERAL01-08102015.pdf

Examiner	Date Time Stamp	Disp.	Trade	Stamp Name
Gloria Garcia	5/5/2016 10:20:11 AM	A	MECH	Approved

Section - Main Section

Enclosure Classification: Enclosed

Wall	Length(ft)	Overhang(ft)
1	37.92	0.0
2	16.33	1.0
3	37.92	1.0
4	16.33	1.0

Eave Height: 9 ft
Parapet Height: 0 ft
Parapet Enclosure: Solid

Roof Shape: Flat

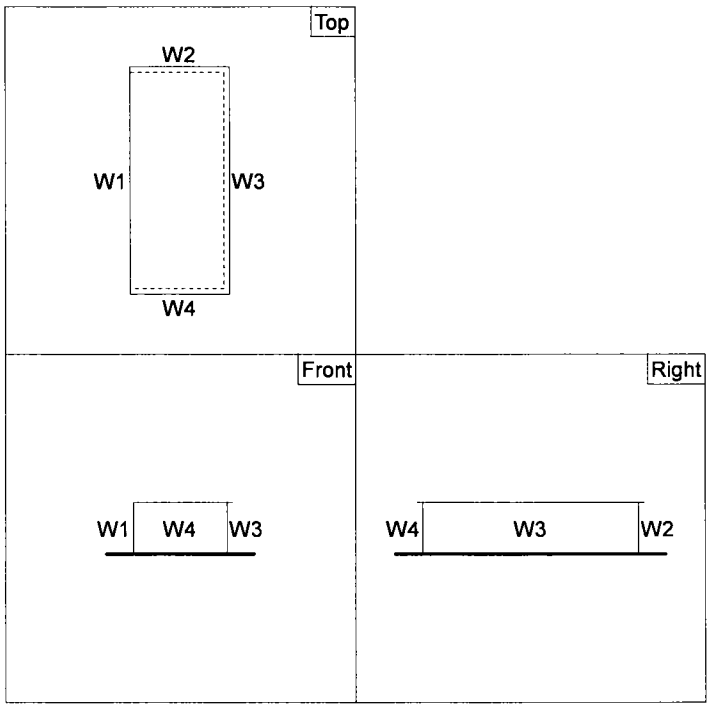

Miami Dade County Department of Regulatory And Economic Resources - Job Copy
0000331469 - 7/21/2016 2:19:15 PM
GENERAL01-08102015.pdf

Examiner	Date Time Stamp	Disp.	Trade	Stamp Name
Gloria Garcia	5/5/2016 10:20:11 AM	A	MECH	Approved

Section - 1

Enclosure Classification: Enclosed

Connected to: Main Section
Connected to wall: W1
Position on W1: 0 ft

Wall	Length(ft)	Overhang(ft)
1	37.92	1.33
2	20.75	2.0
3	37.92	2.08
4	20.75	2.0

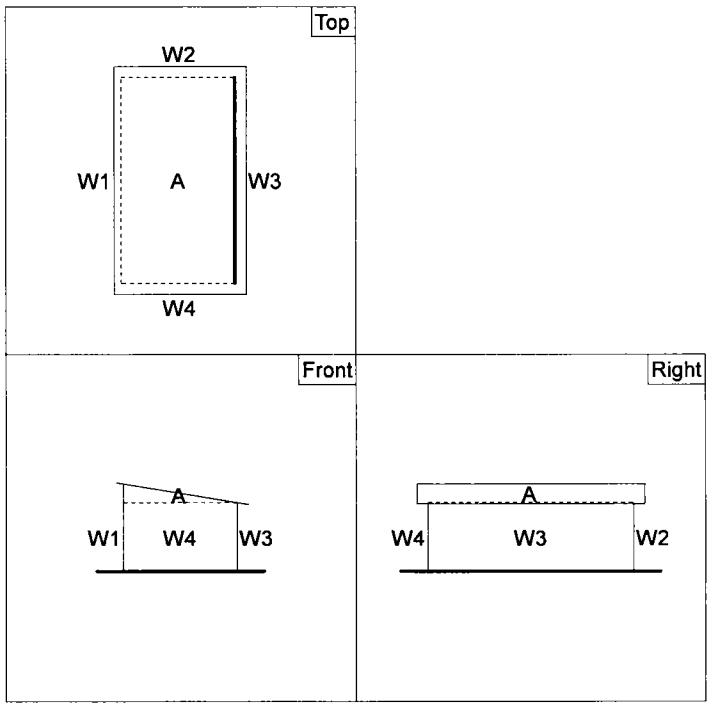

Eave Height: 12.75 ft
Parapet Height: 0 ft
Parapet Enclosure: Solid

Roof Shape: Monoslope

Roof	Slope(:12)
A	2.0

Miami Dade County Department of Regulatory And Economic Resources - Job Copy
0000331469 - 7/21/2016 2:19:15 PM
GENERAL01-08102015.pdf

Examiner	Date Time Stamp	Disp.	Trade	Stamp Name
Gloria Garcia	5/5/2016 10:20:11 AM	A	MECH	Approved

Section - 2

Enclosure Classification: Enclosed

Connected to: 1
Connected to wall: W1
Position on W1: 0 ft

Wall	Length(ft)	Overhang(ft)
1	12.41	1.0
2	8.5	0.0
3	12.41	0.0
4	8.5	1.0

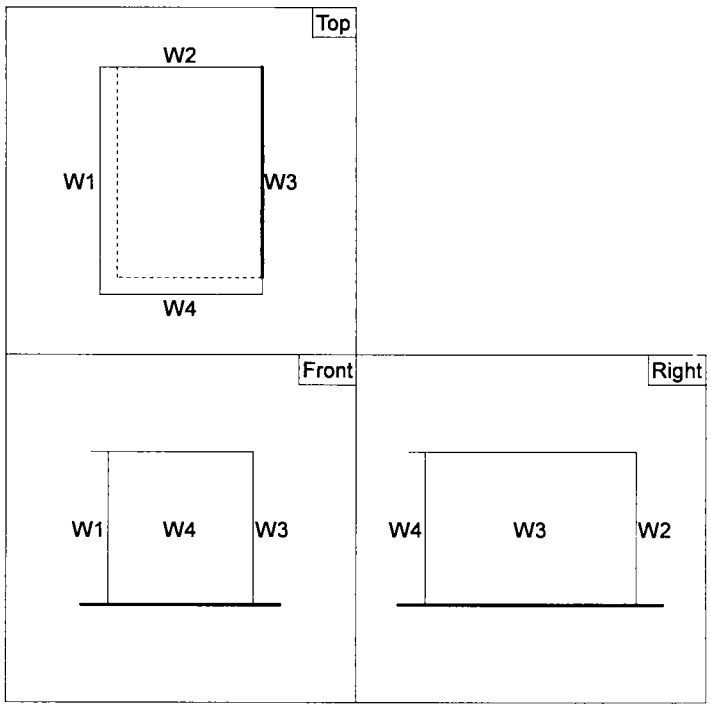

Eave Height: 9 ft
Parapet Height: 0 ft
Parapet Enclosure: Solid

Roof Shape: Flat

Miami Dade County Department of Regulatory And Economic Resources - Job Copy
0000331469 - 7/21/2016 2:19:15 PM
GENERAL01-08102015.pdf

Examiner	Date Time Stamp	Disp.	Trade	Stamp Name
Gloria Garcia	5/5/2016 10:20:11 AM	A	MECH	Approved

Section - 3

Enclosure Classification: Enclosed

Connected to: 2
Connected to wall: W2
Position on W2: -9.17ft

Wall	Length(ft)	Overhang(ft)
1	10.08	1.0
2	17.66	1.0
3	10.08	1.0
4	17.66	0.0

Eave Height: 9 ft
Parapet Height: 0 ft
Parapet Enclosure: Solid

Roof Shape: Flat

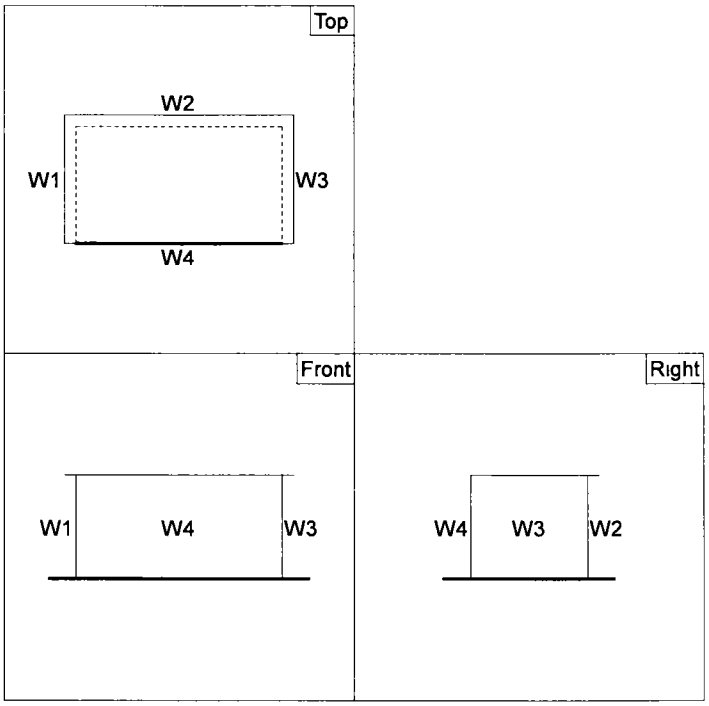

Miami Dade County Department of Regulatory And Economic Resources - Job Copy
0000331469 - 7/21/2016 2:19:15 PM
GENERAL01-08102015.pdf
Examiner Date Time Stamp Disp. Trade Stamp Name
Gloria Garcia 5/5/2016 10:20:11 AM A MECH Approved

ASCE7-10

Composite Drawing

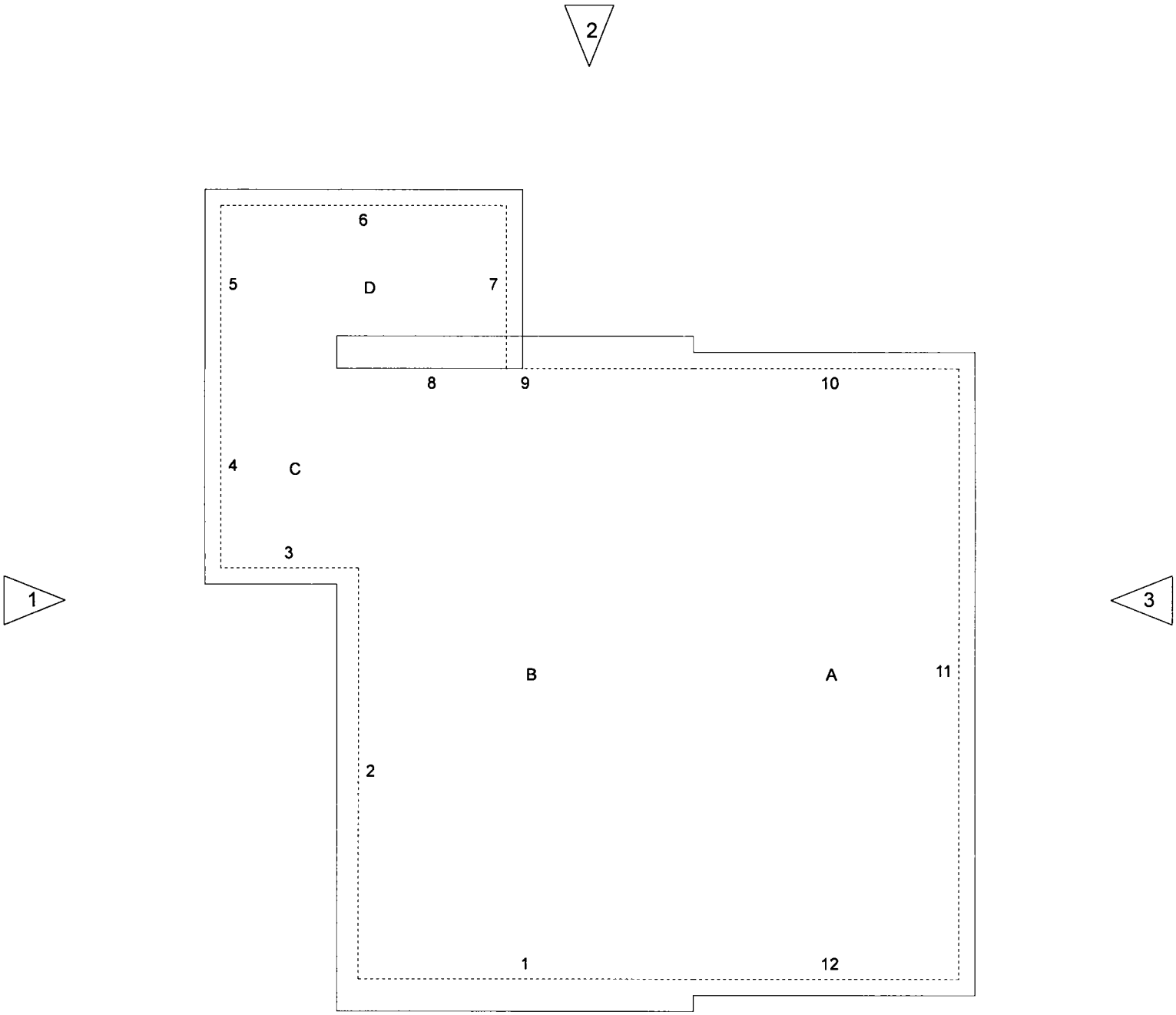

Miami Dade County Department of Regulatory And Economic Resources – Job Copy
0000331469 – 7/21/2016 2:19:15 PM
GENERAL01-08102015.pdf

Examiner	Date Time Stamp	Disp.	Trade	Stamp Name
Gloria Garcia	5/5/2016 10:20:11 AM	A	MECH	Approved

ASCE7-10

Components and Cladding Input

Component Description	Wall/Roof	Surface Label	Zone	Span(ft)	Width(ft)	Area(sqft)
WOOD JOIST	Roof	C	(All)	9.5	1.3	30.1
GROSS PRESSURES	Roof	C	(All)	3.2	3.2	10.0
STANDAR WALL	Wall	4	(All)	9.0	4.0	36.0
WINDOW SH 22	Wall	3	(All)	2.2	3.1	6.7

Miami Dade County Department of Regulatory And Economic Resources - Job Copy
0000331469 - 7/21/2016 2:19:15 PM
GENERAL01-08102015.pdf

Examiner	Date Time Stamp	Disp.	Trade	Stamp Name
Gloria Garcia	5/5/2016 10:20:11 AM	A	MECH	Approved

ASCE7-10

Components and Cladding Output

Component Description	Surface	Zone	z(ft)	q(psf)	GCp	GCpi	ExtPres(psf)	Net w/ +GCpi (psf)	Net w/ -GCpi (psf)
WOOD JOIST	C	1	12.8	56.6	0.25	0.18	14.2	4.0	24.3
			12.8	56.6	-0.95		-53.8	-64.0	-43.6
			12.8	56.6	-1.65	0	-93.4		
		2	12.8	56.6	0.25	0.18	14.2	4.0	24.3
			12.8	56.6	-1.47		-83.2	-93.4	-73.0
			12.8	56.6	-1.65	0	-93.4		
		3	12.8	56.6	0.25	0.18	14.2	4.0	24.3
			12.8	56.6	-1.99		-112.6	-122.8	-102.4
			12.8	56.6	-1.84	0	-104.1		
GROSS PRESSURES	C	1	12.8	56.6	0.30	0.18	17.0	6.8	27.2
			12.8	56.6	-1.00		-56.6	-66.8	-46.4
			12.8	56.6	-1.70	0	-96.2		
		2	12.8	56.6	0.30	0.18	17.0	6.8	27.2
			12.8	56.6	-1.80		-101.9	-112.1	-91.7
			12.8	56.6	-1.70	0	-96.2		
		3	12.8	56.6	0.30	0.18	17.0	6.8	27.2
			12.8	56.6	-2.80		-158.5	-168.7	-148.3
			12.8	56.6		0	-158.5		
STANDAR WALL	4	4	12.8	56.6	0.81	0.18	45.8	35.7	56.0
			12.8	56.6	-0.90		-50.9	-61.1	-40.8
		5	12.8	56.6	0.81		45.8	35.7	56.0
			12.8	56.6	-1.08		-61.1	-71.3	-50.9
WINDOW SH 22	3	4	12.8	56.6	0.90	0.18	50.9	40.8	61.1
			12.8	56.6	-0.99		-56.0	-66.2	-45.8
		5	12.8	56.6	0.90		50.9	40.8	61.1
			12.8	56.6	-1.26		-71.3	-81.5	-61.1

Miami Dade County Department of Regulatory And Economic Resources - Job Copy
0000331469 - 7/21/2016 2:19:15 PM
GENERAL01-08102015.pdf

Examiner	Date Time Stamp	Disp.	Trade	Stamp Name
Gloria Garcia	5/5/2016 10:20:11 AM	A	MECH	Approved

11/41

FERMIN A. MARTINEZ
CONSULTING ENGINEER FL.P.E. # 19363
8340 SW 65th AVE. UNIT 3
Miami, Fl. 33143 Tel. (305) 298-3216

Project : ELLAWISH LLC II
Date : 07/16/2015

LOAD COMB. FACTOR = 0.6WIND + 0.6~~DL~~ 0

GROSS PRESSURES:	Z - 1	66.80	x	0.6	=	- 40.08	PSF
	Z - 2	112.10	x	0.6	=	- 67.26	PSF
	Z - 3	168.70	x	0.6	=	- 101.2	PSF
	OVERHANG	96.20	x	0.6	=	- 57.72	PSF
STANDAR BLOCK WALL :	Z - 4	61.10	x	0.6	=	- 36.66	PSF
	Z - 5	71.30	x	0.6	=	- 42.78	PSF
WINDOWS:							
WINDOW SH-22	Z - 4	61.10	x	0.6	=	+ 36.66	PSF
		66.20	x	0.6	=	- 39.72	PSF
	Z - 5	61.10	x	0.6	=	+ 36.66	PSF
		81.50	x	0.6	=	- 48.9	PSF

Miami Dade County Department of Regulatory And Economic Resources – Job Copy
0000331469 – 7/21/2016 2:19:15 PM
GENERAL01-08102015.pdf

Examiner	Date Time Stamp	Disp.	Trade	Stamp Name
Gloria Garcia	5/5/2016 10:20:11 AM	A	MECH	Approved

12/41

FERMIN A. MARTINEZ, P.E.
CONSULTING ENGINEER FL. P.E. No 19363
8340 SW 65TH AVE. UNIT 3
MIAMI, FL. 33143
Ph. 305-298-3216

Project: ELLAWISH LLC II
Date: 07/16/2015

Ellawish LLC II:

Load Analysis:

Dead Load:

Roof: Wood Rafters $Roof_{DL} := 25psf$

Live Load:

$Roof_{LL} := 30psf$

Roof: **Florida Building Code 2010**
Minimum Roof Live Loads - Roof w/ slope = 1/4":12

Wind:

- **Location Data**:

Wind speed : V = **175** mph

Category Exposure : **"C"**

- **Building Data**:

Building Classification: " I I"

Building: **ENCLOSED**

Mean Height: $H_{Bldg} := 9ft + 4in$

Roof Angle (1/4":12): $\theta_{rf} := 1.19deg$

"a" Calculation:

Least horizontal dimension :

$B_{horiz} := 23.17ft$ Wall height : $h_{wall} := 9.33ft$

$$a := \left| \begin{array}{l} x1 \leftarrow 0.1 \cdot B_{horiz} \\ x2 \leftarrow 0.4 \cdot h_{wall} \\ x3 \leftarrow \min(x1, x2) \\ x4 \leftarrow 0.04 \cdot B_{horiz} \\ x5 \leftarrow 3ft \\ x6 \leftarrow \max(x4, x5) \\ x3 \quad \text{if } x3 > x6 \\ x6 \quad \text{otherwise} \end{array} \right.$$

$a = 3.0ft$ ft

Miami Dade County Department of Regulatory And Economic Resources - Job Copy
0000331469 - 7/21/2016 2:19:15 PM
GENERAL01-08102015.pdf

Examiner	Date Time Stamp	Disp.	Trade	Stamp Name
Gloria Garcia	5/5/2016 10:20:11 AM	A	MECH	Approved

FERMIN A. MARTINEZ, P.E.
CONSULTING ENGINEER
FL. P.E. No 19363
8340 SW 65TH AVE. UNIT 3
Miami, Fl. 33143
Tel. (305) 298-3216

Project : ELLAWISH LLC II
Date : 07/16/2015

13/41

ROOF MEMBER: **4' -3" OUTLOOKERS**

WIND LOAD AS PER ASCE 7/10 FOR MEAN ROOF ELEVATION LESS THAN 60 FEET

B = BUILDING MINIMUM WIDTH (FT) = 23.17

H = MEAN ROOF ELEVATION (FT) = 9.33

V= WIND VELOCITY (MPH) = 175

Kzt = TOPG. FACTOR = 1.00
Kd = WIND DIRECT. FACTOR 0.85
EXPOSURE CATEGORY = C

TRIBUTARY WIDTH (FT) = 2.00

		DIST/SUP		OVERHG		
TRIBUTARY LENGTH (FT)	=	3.25	+	1	=	4.25

TRIBUTARY AREA L X W (SF) = 8.50
TRIBUTARY AREA L X .3L (SF) = 5.42

FINAL TRIB. AREA (SF) = 8.50

ROOF GEOMETRY :

H (FT) = 0.25 L (FT) = 12.00

ROOF SLOPE (GR)= 1.19

Kz= EXPOSURE COEFFICIENTS 0.85

V = VELOCITY PRESSURE = 0.00256 x Kz x Kzt x Kd x V^2 = 56.64 PSF

GCp COEFFICIENTS Zones 1,2 = -1.20

CPI COEFFICIENTS = + / - 0.18

DESIGN PRESSURE :

P = -78.17 PSF

FINAL PRESSURE= -78.17 PSF

a = ZONE 2 EXTENSION (FT) = 3

SMALLER BETWEEN : a=0.10 B= 2.317 AND
a=0.4 H = 3.732
2.317
BUT NOT LESS THAN : 4% OF B= 0.9268 OR
3
= 3

Miami-Dade County Department of Regulatory and Economic Resources – Job Copy
0000331469 – 7/21/2016 2:19:15 PM
GENERAL01-08102015.pdf

Examiner	Date Time Stamp	Disp.	Trade	Stamp Name
Gloria Garcia	5/5/2016 10:20:11 AM	A	MECH	Approved

FERMIN A. MARTINEZ, P.E.
CONSULTING ENGINEER
FL. P.E. No 19363
8340 SW 65TH AVE. UNIT 3
Miami, Fl. 33143
Tel. (305) 298-3216

Project : ELLAWISH LLC II
Date : 07/16/2015

RAFTER SUPPORT REACTIONS (OUTLOOKERS)

LOAD DATA

DLroof	=	10.00	PSF
DLsup	=	15.00	PSF
LLroof	=	30.00	PSF
WLroof	=	-78.17	PSF

BEAM GEOMETRY

DIST. BETWEEN SUPPORTS	=	3.25	FT
OVERHANG @ RIGHT END	=	1.00	FT
SPACING	=	2.00	FT

LOAD COMB. FACTOR = 0.60

SUPPORT REACTIONS AT EXISTING STRUCTURE

W g	=	110	PLF
W u	=	-73.80	PLF

G @ LEFT END (AT EXIST. STRUCTURE) = **161.83** POUNDS

U @ LEFT END (AT EXIST. STRUCTURE) = **-108.57** POUNDS

SUPPORT REACTIONS AT NEW ROOF BEAM

W-G	=	110	PLF
W-U	=	-73.80	PLF

G @ RIGHT END (AT NEW ROOF BEAM) = **305.67** POUNDS

U @ RIGHT END (AT NEW ROOF BEAM) = **-205.09** POUNDS

Miami Dade County Department of Regulatory And Economic Resources – Job Copy
0000331469 – 7/21/2016 2:19:15 PM
GENERAL01-08102015.pdf

Examiner	Date Time Stamp	Disp.	Trade	Stamp Name
Gloria Garcia	5/5/2016 10:20:11 AM	A	MECH	Approved

FERMIN A. MARTINEZ, P.E.
CONSULTING ENGINEER
FL. P.E. No 19363
8340 SW 65TH AVE. UNIT 3
Miami, Fl. 33143
Tel. (305) 298-3216

Project : ELLAWISH LLC II
Date : 07/16/2015

15/41

ROOF MEMBER: **5' -11" DIAGONAL OUTLOOKER**

WIND LOAD AS PER ASCE 7/10 FOR MEAN ROOF ELEVATION LESS THAN 60 FEET

B = BUILDING MINIMUM WIDTH (FT) = 23.17

H = MEAN ROOF ELEVATION (FT) = 9.33

V= WIND VELOCITY (MPH) = 175

Kzt = TOPG. FACTOR = 1.00
Kd = WIND DIRECT. FACTOR 0.85
EXPOSURE CATEGORY = C

TRIBUTARY WIDTH (FT) = 2.50

		DIST/SUP		OVERHG		
TRIBUTARY LENGTH (FT)	=	4.50	+	1.41	=	5.91

TRIBUTARY AREA L X W (SF) = 14.78
TRIBUTARY AREA L X .3L (SF) = 10.48

FINAL TRIB. AREA (SF) = 14.78

ROOF GEOMETRY :

H (FT) = 0.25 L (FT) = 12.00

ROOF SLOPE (GR)= 1.19

Kz= EXPOSURE COEFFICIENTS 0.85

V = VELOCITY PRESSURE = 0.00256 x Kz x Kzt x Kd x V^2 = 56.64 PSF

GCp COEFFICIENTS Zones 1,2 = -1.20

CPI COEFFICIENTS = + / - 0.18

DESIGN PRESSURE :

P = -78.17 PSF

FINAL PRESSURE= -78.17 PSF

a = ZONE 2 EXTENSION (FT) = 3

SMALLER BETWEEN : a=0.10 B= 2.317 AND
a=0.4 H = 3.732

BUT NOT LESS THAN : 4% OF B= 0.9268 OR
3
= 3

Miami Dade County Department of Regulatory And Economic Resources - Job Copy
0000331469 - 7/21/2016 2:19:15 PM
GENERAL01-08102015.pdf

Examiner	Date Time Stamp	Disp.	Trade	Stamp Name
Gloria Garcia	5/5/2016 10:20:11 AM	A	MECH	Approved

FERMIN A. MARTINEZ, P.E.
CONSULTING ENGINEER
FL. P.E. No 19363
8340 SW 65TH AVE. UNIT 3
Miami, Fl. 33143
Tel. (305) 298-3216

Project : ELLAWISH LLC II
Date : 07/16/2015

RAFTER SUPPORT REACTIONS (DIAGONAL OUTLOOKER)

LOAD DATA

DLroof	=	10.00	PSF
DLsup	=	15.00	PSF
LLroof	=	30.00	PSF
WLroof	=	-78.17	PSF

BEAM GEOMETRY

DIST. BETWEEN SUPPORTS	=	4.50	FT
OVERHANG @ RIGHT END	=	1.41	FT
SPACING	=	2.50	FT

LOAD COMB. FACTOR = 0.60

SUPPORT REACTIONS AT EXISTING STRUCTURE

W g	=	137.5	PLF
W u	=	-92.25	PLF

G @ LEFT END (AT EXIST. STRUCTURE) = **279.00** POUNDS

U @ LEFT END (AT EXIST. STRUCTURE) = **-187.19** POUNDS

SUPPORT REACTIONS AT NEW ROOF BEAM

W-G	=	137.5	PLF
W-U	=	-92.25	PLF

G @ RIGHT END (AT NEW ROOF BEAM) = **533.62** POUNDS

U @ RIGHT END (AT NEW ROOF BEAM) = **-358.02** POUNDS

Miami Dade County Department of Regulatory And Economic Resources - Job Copy
0000331469 - 7/21/2016 2:19:15 PM
GENERAL01-08102015.pdf

Examiner	Date Time Stamp	Disp.	Trade	Stamp Name
Gloria Garcia	5/5/2016 10:20:11 AM	A	MECH	Approved

FERMIN A. MARTINEZ, P.E.
CONSULTING ENGINEER
FL. P.E. No 19363
8340 SW 65TH AVE. UNIT 3
Miami, Fl. 33143
Tel. (305) 298-3216

Project : ELLAWISH LLC II
Date : 07/16/2015

17/41

ROOF MEMBER: **9' -6" MONOSLOPE RAFTER W/TRIBUTARY WIDTH = 2.29'**

WIND LOAD AS PER ASCE 7/10 FOR MEAN ROOF ELEVATION LESS THAN 60 FEET

B = BUILDING MINIMUM WIDTH (FT) = 23.17

H = MEAN ROOF ELEVATION (FT) = 9.33

V= WIND VELOCITY (MPH) = 175

Kzt = TOPG. FACTOR = 1.00
Kd = WIND DIRECT. FACTOR 0.85
EXPOSURE CATEGORY = C

TRIBUTARY WIDTH (FT) = 2.29

		DIST/SUP		OVERHG		
TRIBUTARY LENGTH (FT)	=	8.50	+	1	=	9.50

TRIBUTARY AREA L X W (SF) = 21.76
TRIBUTARY AREA L X .3L (SF) = 27.08

FINAL TRIB. AREA (SF) = 27.08

ROOF GEOMETRY :

H (FT) = 0.25 L (FT) = 12.00

ROOF SLOPE (GR)= 1.19

Kz= EXPOSURE COEFFICIENTS 0.85

V = VELOCITY PRESSURE = 0.00256 x Kz x Kzt x Kd x V^2 = 56.64 PSF

GCp COEFFICIENTS Zones 1,2 = -1.20

CPI COEFFICIENTS = + / - 0.18

DESIGN PRESSURE :

P = -78.17 PSF

FINAL PRESSURE= -78.17 PSF

a = ZONE 2 EXTENSION (FT) = 3

SMALLER BETWEEN : a=0.10 B= 2.317 AND
a=0.4 H = 3.732
BUT NOT LESS THAN : 4% OF B= 0.9268 OR
3
= 3

Miami Dade County Department of Regulatory And Economic Resources – Job Copy
0000331469 – 7/21/2016 2:19:15 PM
GENERAL01-08102015.pdf

Examiner	Date Time Stamp	Disp.	Trade	Stamp Name
Gloria Garcia	5/5/2016 10:20:11 AM	A	MECH	Approved

FERMIN A. MARTINEZ, P.E.
CONSULTING ENGINEER
FL. P.E. No 19363
8340 SW 65TH AVE. UNIT 3
Miami, Fl. 33143
Tel. (305) 298-3216

Project : ELLAWISH LLC II
Date : 07/16/2015

18/41

RAFTER SUPPORT REACTIONS W/ TRIBUTARY WIDTH = 2.29'

LOAD DATA

DLroof	=	10.00	PSF
DLsup	=	15.00	PSF
LLroof	=	30.00	PSF
WLroof	=	-78.17	PSF

BEAM GEOMETRY

DIST. BETWEEN SUPPORTS	=	8.50	FT
OVERHANG @ RIGHT END	=	1.00	FT
SPACING	=	2.29	FT

LOAD COMB. FACTOR = 0.60

SUPPORT REACTIONS AT EXISTING STRUCTURE

W g	=	125.95	PLF
W u	=	-84.50	PLF

G @ LEFT END (AT EXIST. STRUCTURE) = **527.88** POUNDS

U @ LEFT END (AT EXIST. STRUCTURE) = **-354.17** POUNDS

SUPPORT REACTIONS AT NEW ROOF BEAM

W-G	=	125.95	PLF
W-U	=	-84.50	PLF

G @ RIGHT END (AT NEW ROOF BEAM) = **668.65** POUNDS

U @ RIGHT END (AT NEW ROOF BEAM) = **-448.62** POUNDS

Miami Dade County Department of Regulatory And Economic Resources - Job Copy
0000331469 - 7/21/2016 2:19:15 PM
GENERAL01-08102015.pdf

Examiner	Date Time Stamp	Disp.	Trade	Stamp Name
Gloria Garcia	5/5/2016 10:20:11 AM	A	MECH	Approved

FERMIN A. MARTINEZ, P.E.
CONSULTING ENGINEER
FL. P.E. No 19363
8340 SW 65TH AVE. UNIT 3
Miami, Fl. 33143
Tel. (305) 298-3216

Project : ELLAWISH LLC II
Date : 07/16/2015

ROOF MEMBER: **9' -6" MONOSLOPE RAFTER**

WIND LOAD AS PER ASCE 7/10 FOR MEAN ROOF ELEVATION LESS THAN 60 FEET

B = BUILDING MINIMUM WIDTH (FT) = 23.17

H = MEAN ROOF ELEVATION (FT) = 9.33

V= WIND VELOCITY (MPH) = 175

Kzt = TOPG. FACTOR = 1.00
Kd = WIND DIRECT. FACTOR 0.85
EXPOSURE CATEGORY = C

TRIBUTARY WIDTH (FT) = 1.33

		DIST/SUP		OVERHG		
TRIBUTARY LENGTH (FT)	=	8.50	+	1	=	9.50

TRIBUTARY AREA L X W (SF) = 12.64
TRIBUTARY AREA L X .3L (SF) = 27.08

FINAL TRIB. AREA (SF) = 27.08

ROOF GEOMETRY :

H (FT) = 0.25 L (FT) = 12.00

ROOF SLOPE (GR)= 1.19

Kz= EXPOSURE COEFFICIENTS 0.85

V = VELOCITY PRESSURE = 0.00256 x Kz x Kzt x Kd x V^2 = 56.64 PSF

GCp COEFFICIENTS Zones 1,2 = -1.20

CPI COEFFICIENTS = + / - 0.18

DESIGN PRESSURE :

P = -78.17 PSF

FINAL PRESSURE= -78.17 PSF

a = ZONE 2 EXTENSION (FT) = 3

SMALLER BETWEEN : a=0.10 B= 2.317 AND
a=0.4 H = 3.732
= 2.317
BUT NOT LESS THAN : 4% OF B= 0.9268 OR
3
= 3

Miami-Dade County Department of Regulatory and Economic Resources – Job Copy
0000331469 – 7/21/2016 2:19:15 PM
GENERAL01-08102015.pdf

Examiner	Date Time Stamp	Disp.	Trade	Stamp Name
Gloria Garcia	5/5/2016 10:20:11 AM	A	MECH	Approved

FERMIN A. MARTINEZ, P.E.
CONSULTING ENGINEER
FL. P.E. No 19363
8340 SW 65TH AVE. UNIT 3
Miami, Fl. 33143
Tel. (305) 298-3216

Project : ELLAWISH LLC II
Date : 07/16/2015

20/41

RAFTER SUPPORT REACTIONS

LOAD DATA

DLroof	=	10.00	PSF
DLsup	=	15.00	PSF
LLroof	=	30.00	PSF
WLroof	=	-78.17	PSF

BEAM GEOMETRY

DIST. BETWEEN SUPPORTS	=	8.50	FT
OVERHANG @ RIGHT END	=	1.00	FT
SPACING	=	1.33	FT

LOAD COMB. FACTOR = 0.60

SUPPORT REACTIONS AT EXISTING STRUCTURE

W g	=	73.15	PLF
W u	=	-49.08	PLF

G @ LEFT END (AT EXIST. STRUCTURE) = **306.58** POUNDS

U @ LEFT END (AT EXIST. STRUCTURE) = **-205.70** POUNDS

SUPPORT REACTIONS AT NEW ROOF BEAM

W-G	=	73.15	PLF
W-U	=	-49.08	PLF

G @ RIGHT END (AT NEW ROOF BEAM) = **388.34** POUNDS

U @ RIGHT END (AT NEW ROOF BEAM) = **-260.55** POUNDS

Miami Dade County Department of Regulatory And Economic Resources – Job Copy
0000331469 – 7/21/2016 2:19:15 PM
GENERAL01-08102015.pdf

Examiner	Date Time Stamp	Disp.	Trade	Stamp Name
Gloria Garcia	5/5/2016 10:20:11 AM	A	MECH	Approved

FERMIN A. MARTINEZ, P.E.
CONSULTING ENGINEER
FL. P.E. No 19363
8340 SW 65TH AVE. UNIT 3
Miami, Fl. 33143
Tel. (305) 298-3216

Project : ELLAWISH LLC II
Date : 07/16/2015

21/41

RAFTER DESIGN W/ TRIBUTARY WIDTH = 2.29'

LOAD DATA

DLroof =	10	PSF					SP No 2
DLsup =	15	PSF					TABLE 4B-NDS
LLroof =	30	PSF	SECTION	I	S	Fb
WLroof =	-78.17	PSF		IN4	IN3	PSI
			2X8	47.64	13.14	1,200

BEAM DATA

DIST. BETWEEN SUPPORTS = 8.50 FT
OVERHANG @ RIGHT END = 1.00 FT
SPACING BETWEEN R'TERS = 2.29 FT
Fb = 1,200 PSI
Fbx1.33= 1,596 PSI
LOAD COMB. FACTOR = 0.60

1. DESIGN FOR LOAD COMBINATION DLroof+DLsup+LL

W g = 125.95 PLF

REQUIRED MODULUS OF SECTION

MAX. MOMENT BETWEEN SUPPORTS = 1106.22 P-LF

MAX. MOMENT LOCATION (X) FROM LEFT END = 4.19 FT

S REQ = 11.06 IN3
S ACT = 13.14 IN3 SECTION 2 BY 8

S ACT > S REQ **TRUE**

REQUIRED MOMENT OF INERTIA

MAX DEFLECTION = 1 / 180 = 0.57 IN

I REQ = 15.77 IN4
I ACT = 47.64 IN4 SECTION 2 BY 8

I ACT > I REQ **TRUE**

Miami Dade County Department of Regulatory And Economic Resources - Job Copy
0000331469 - 7/21/2016 2:19:15 PM
GENERAL01-08102015.pdf

Examiner	Date Time Stamp	Disp.	Trade	Stamp Name
Gloria Garcia	5/5/2016 10:20:11 AM	A	MECH	Approved

FERMIN A. MARTINEZ, P.E.
CONSULTING ENGINEER
FL. P.E. No 19363
8340 SW 65TH AVE. UNIT 3
Miami, Fl. 33143
Tel. (305) 298-3216

Project : ELLAWISH LLC II
Date : 07/16/2015

22/41

2. DESIGN FOR LOAD COMBINATION DLroof+WL W/ TRIBUTARY WIDTH = 2.29'

W u = -84.50 PLF

BEAM DATA

Fb*1.33 = 1,200 X 1.33 = 1,596 PSI

REQUIRED MODULUS OF SECTION

MAX. MOMENT BETWEEN SUPPORTS = -742.20 P-LF

MAX. MOMENT LOCATION (X) FROM LEFT END = 4.19 FT

S REQ = 5.58 IN3
S ACT = 13.14 IN3 SECTION 2 BY 8

S ACT > S REQ **TRUE** **USE (1) 2 X 8**

Miami Dade County Department of Regulatory And Economic Resources – Job Copy
0000331469 – 7/21/2016 2:19:15 PM
GENERAL01-08102015.pdf

Examiner	Date Time Stamp	Disp.	Trade	Stamp Name
Gloria Garcia	5/5/2016 10:20:11 AM	A	MECH	Approved

FERMIN A. MARTINEZ, P.E.
CONSULTING ENGINEER
FL. P.E. No 19363
8340 SW 65TH AVE. UNIT 3
Miami, Fl. 33143
Tel. (305) 298-3216

Project : ELLAWISH LLC II
Date : 07/16/2015

23/41

RAFTER DESIGN

LOAD DATA

DLroof = 10 PSF
DLsup = 15 PSF
LLroof = 30 PSF
WLroof = -78.17 PSF

SECTION	I IN4	S IN3	SP No 2 TABLE 4B-NDS Fb PSI
2X8	47.64	13.14	1,200

BEAM DATA

DIST. BETWEEN SUPPORTS = 8.50 FT
OVERHANG @ RIGHT END = 1.00 FT
SPACING BETWEEN R'TERS = 1.33 FT
Fb = 1,200 PSI
Fbx1.33= 1,596 PSI
LOAD COMB. FACTOR = 0.60

1. DESIGN FOR LOAD COMBINATION DLroof+DLsup+LL

W g = 73.15 PLF

REQUIRED MODULUS OF SECTION

MAX. MOMENT BETWEEN SUPPORTS = 642.47 P-LF

MAX. MOMENT LOCATION (X) FROM LEFT END = 4.19 FT

S REQ = 6.42 IN3
S ACT = 13.14 IN3 SECTION 2 BY 8

S ACT > S REQ **TRUE**

REQUIRED MOMENT OF INERTIA

MAX DEFLECTION = 1 / 180 = 0.57 IN

I REQ = 9.16 IN4
I ACT = 47.64 IN4 SECTION 2 BY 8

I ACT > I REQ **TRUE**

Miami Dade County Department of Regulatory And Economic Resources - Job Copy
0000331469 - 7/21/2016 2:19:15 PM
GENERAL01-08102015.pdf

Examiner	Date Time Stamp	Disp.	Trade	Stamp Name
Gloria Garcia	5/5/2016 10:20:11 AM	A	MECH	Approved

FERMIN A. MARTINEZ, P.E.
CONSULTING ENGINEER
FL. P.E. No 19363
8340 SW 65TH AVE. UNIT 3
Miami, Fl. 33143
Tel. (305) 298-3216

Project : ELLAWISH LLC II
Date : 07/16/2015

2. DESIGN FOR LOAD COMBINATION DLroof+WL

W u = -49.08 PLF

BEAM DATA

Fb*1.33 = 1,200 X 1.33 = 1,596 PSI

REQUIRED MODULUS OF SECTION

MAX. MOMENT BETWEEN SUPPORTS = -431.06 P-LF

MAX. MOMENT LOCATION (X) FROM LEFT END = 4.19 FT

S REQ = 3.24 IN3
S ACT = 13.14 IN3 SECTION 2 BY 8

S ACT > S REQ **TRUE** **USE 2 X 8 @ 16"**

Miami Dade County Department of Regulatory And Economic Resources – Job Copy
0000331469 – 7/21/2016 2:19:15 PM
GENERAL01-08102015.pdf

Examiner	Date Time Stamp	Disp.	Trade	Stamp Name
Gloria Garcia	5/5/2016 10:20:11 AM	A	MECH	Approved

25/41

FERMIN A. MARTINEZ, P.E.
CONSULTING ENGINEER FL. P.E. No 19363
8340 SW 65TH AVE. UNIT 3
MIAMI, FL. 33143
Ph. 305-298-3216

Project: ELLAWISH LLC II
Date: 07/16/2015

		Zone 4	Zone 5
Wall- -->	Standar Wall (Enclosed) :	$Zone4_1 := 36.66psf$	$Zone5_1 := 42.78psf$

Masonry Wall Design :

Standard Wall

Wall height between floor and Roof : $H_{wall} := 9ft + 0in$ Tributary Length of Roof : $L_{trib1} := 5ft + 3in$

Wall Weight : $w_{wall} := 65psf$

- **Vertical load** :

Wall self-weight : $sw_{wall} := w_{wall} \cdot (0.5 \cdot H_{wall})$ $sw_{wall} = 292.5\,plf$

Dead load : $w_{DL} := L_{trib1} \cdot Roof_{DL}$ $w_{DL} = 131\,plf$

Live load : $w_{LL} := L_{trib1}\, Roof_{LL}$ $w_{LL} = 158\,plf$

Total load : $w_{Tot} := sw_{wall} + w_{DL} + w_{LL}$ $w_{Tot} = 581\,plf$

- **Moments** :

Bending Moment : (due to wind) $M_{wall} := 8^{-1} \cdot Zone4_1 \cdot H_{wall}^2$ $M_{wall} = 0.37 \frac{Kip\,ft}{ft}$

- **Masonry Geometric Section**

Thickness of wall : $t := 7.625in$ (Nominal Thickness of wall = 8 in.)

Thickness of flange : $t_f := 1.25in$

Distance comp. fiber to cent.reinf. $d := 0.5 \cdot t$ $d = 3.81\,in$

Width oh section (max= 6t) : $b := 48in$ *(Select bars spacing "b" considering moment)*

Equivalent solid thickness : $t_{eq} := 4.9in$ for t=8 in and $b = 48\,in$

Wall's radius of gyration : $r := t \cdot 12^{-0.5}$ $r = 2.2\,in$

Modular ratio Es/Em : $n := 25.8$

Miami Dade County Department of Regulatory And Economic Resources – Job Copy
0000331469 – 7/21/2016 2:19:15 PM
GENERAL01-08102015.pdf
Examiner Date Time Stamp Disp. Trade Stamp Name
Gloria Garcia 5/5/2016 10:20:11 AM A MECH Approved

FERMIN A. MARTINEZ, P.E.
CONSULTING ENGINEER FL. P.E. No 19363
8340 SW 65TH AVE. UNIT 3
MIAMI, FL. 33143
Ph. 305-298-3216

Project: ELLAWISH LLC II
Date: 07/16/2015

- **Masonry Stresses**

Specified Compressive Strength of Masonry : partially grouted $f_m := 1500psi$

Specified tensile or compressive stress in reinforcement : $f_s := 24000psi$

Allowable Compressive Stress due Axial Load : $Hcal_{wall} := H_{wall}$

For h/r < 99 slenderless limit formulae $Hcal_{wall} \cdot r^{-1} = 49$ $F_a := 0.25f_m\left[1 - Hcal_{wall}^2 (140r)^{-2}\right]$ $F_a = 329\ psi$

Allowable Compressive Stress due Flexure : $F_b := 3^{-1} f_m$ Special inspection $F_b = 500\ psi$

Calculated Compressive Stress (fa), axial load only : $f_{a.comp} := w_{Tot}(t_{eq})^{-1}$ $f_{a.comp} = 9.9\ psi$

Compressed concrete section case - No tensioned steel
Available Compressive Stress due Flexure : $f_{b.avail} := \left(1.0 - \frac{f_{a.comp}}{F_a}\right) \cdot F_b$ $f_{b.avail} = 485\ psi$

- **Selecting reinforcement** :

Estimate Reinforcement : $As_{est} := M_{wall} \cdot (f_s \cdot 0.89 \cdot d)^{-1}$ $As_{est} = 0.055 \frac{in^2}{ft}$

Proposed Reinforcement :

$Bar := 5$ $As_{bar} := \frac{\pi}{256.4} \cdot (Bar \cdot in)^2$ $As_{bar} = 0.31\ in^2$ at $b = 48\ in$ $A_s := As_{bar} \cdot b^{-1}$ $A_s = 0.077 \frac{in^2}{ft}$

Reinforcing Ratio : $\rho := A_s \cdot b \cdot (b \cdot d)^{-1}$ $\rho = 0.0017$

Compression block location :
(for rectangular section) $k := \sqrt{(n \cdot \rho)^2 + 2 \cdot n \cdot \rho} - n \cdot \rho$ $k = 0.3$

Check Compression block : $k \cdot d = 1\ in$ > $t_f = 1.3\ in$ => design as **T-beam**

T-beam Design

Compression block location :
(for T-beam section) $k := \left[\rho \cdot n + 0.5 \cdot \left(\frac{t_f}{d}\right)^2\right] \cdot \left[\rho \cdot n + \left(\frac{t_f}{d}\right)\right]^{-1}$ $k = 0.3$

Lever arm :
(for T-beam section) $j := \left[6 - 6 \cdot \frac{t_f}{d} + 2 \cdot \left(\frac{t_f}{d}\right)^2 + \left(\frac{t_f}{d}\right)^3 \cdot \frac{\rho \cdot n}{2}\right] \cdot \left(6 - 3 \cdot \frac{t_f}{d}\right)^{-1}$ $j = 0.847$

Resisting Moment :
(Whichever is smaller)

$M_s := A_s \cdot f_s \cdot j \cdot d$ $M_s = 0.49 \frac{Kip \cdot ft}{ft}$

$M_m := f_{b.avail} \cdot \left(1 - \frac{t_f}{2 \cdot k \cdot d}\right) \cdot t_f \cdot j \cdot d$ $M_m = 0.73 \frac{Kip \cdot ft}{ft}$

Checking : $M_{Resist} := if(M_m < M_s, M_m, M_s)$ $M_{Resist} = 0.49 \frac{Kip \cdot ft}{ft}$ > $M_{wall} = 0.37 \frac{Kip \cdot ft}{ft}$ => OK

Miami Dade County Department of Regulatory And Economic Resources - Job Copy
0000331469 - 7/21/2016 2:19:15 PM
GENERAL01-08102015.pdf
Examiner Date Time Stamp Disp. Trade Stamp Name
Gloria Garcia 5/5/2016 10:20:11 AM A MECH Approved

MASONRY WALL REINFORCING - #5 Bar @ 48 in

FERMIN A. MARTINEZ, P.E.
CONSULTING ENGINEER FL. P.E. No 19363
8340 SW 65TH AVE. UNIT 3
MIAMI, FL. 33143
Ph. 305-298-3216

Project: ELLAWISH LLC II
Date: 07/16/2015

Reinforced Wall at 3'-1" opening:

Geometric: Tributary width 1: $B_1 := 18.5in$ **Wall height:** $H_{wall} := 9ft + 0in$

Tributary width 2: $B_2 := 46.5in$

Vertical load:

Wall self-weight: $sw_{wall} := 292.5plf$

Dead load: $w_{DL} := 131plf$

Live load: $w_{LL} := 158plf$

Total load: $w_{Tot} := sw_{wall} + w_{DL} + w_{LL}$

$w_{Tot} := w_{Tot} \cdot B_2$ $w_{Tot} = 2\ Kip$

Moments: Bending Moment (due to wind):

$M_{wall} := 9^{-1} \cdot Zone4_1 \cdot H_{wall}^2 \cdot B_2$

$M_{wall} = 1.3\ Kip\ ft$

- **Masonry Geometric Section**

Thickness of wall : $t := 7.625in$ (Nominal Thickness of wall = 8 in.)

Thickness of flange : $t_f := 1.25in$

Distance comp. fiber to cent. reinf. $d := t - 2in$ $d = 5.62\ in$

Width oh section (max = 6t) : $b := B_2 - B_1$ $b = 28\ in$

Equivalent solid thickness : $t_{eq} := 6.0in$ for t=8 in and $b = 28\ in$

Wall's radius of gyration : $r := t \cdot 12$ $r = 2.2\ in$

Modular ratio Es / Em : $n := 25.8$

Masonry Stresses

Specified Compressive Strength of Masonry: partially grouted $f_m := 1500psi$

Specified tensile or compressive stress in reinforcement: $f_s := 24000psi$

Allowable Compressive Stress due Axial Load : $Hcal_{wall} := H_{wall}$

Miami Dade County Department of Regulatory And Economic Resources - Job Copy
0000331469 - 7/21/2016 2:19:15 PM
GENERAL01-08102015.pdf
Examiner Date/Time Stamp Disp. Trade Stamp Name
Gloria Garcia 5/5/2016 10:20:11 AM A MECH Approved

28/41

FERMIN A. MARTINEZ, P.E.
CONSULTING ENGINEER FL. P.E. No 19363
8340 SW 65TH AVE. UNIT 3
MIAMI, FL. 33143
Ph. 305-298-3216

Project: ELLAWISH LLC II
Date: 07/16/2015

For h/r < 99 slenderless limit formulae $Hcal_{wall} \cdot r^{-1} = 49$ $F_a := 0.25 f_m \left[1 - Hcal_{wall}^2 (140r)^{-2}\right]$ $F_a = 329\ psi$

Allowable Compressive Stress due Flexure : $F_b := 3^{-1} f_m$ Special inspection $F_b = 500\ psi$

Calculated Compressive Stress (fa), axial load only : $f_{a.comp} := w_{Tot} (t_{eq} \cdot b)^{-1}$ $f_{a.comp} = 13.4\ psi$

Compressed concrete section case - No tensioned steel

Available Compressive Stress due Flexure : $f_{b.avail} := \left(1.0 - \frac{f_{a.comp}}{F_a}\right) \cdot F_b$ $f_{b.avail} = 480\ psi$

- **Selecting reinforcement**:

Estimate Reinforcement: $As_{est} := M_{wall} \cdot (f_s \cdot 0.89 \cdot d)^{-1}$ No. of Bars: $n_{Bar} := 1$ **One Grouted cell at each opening side w/ 1 bar each cell**

$As_{est} = 0.128\ in^2$ Bar #: $Bar := 5$

Proposed Reinforcement: $As_{bar} := \frac{\pi \cdot (Bar \cdot in)^2}{256.4}$ $As_{bar} = 0.31\ in^2$ $A_s := n_{Bar} \cdot As_{bar}$ $A_s = 0.31\ in^2$

Reinforcing Ratio: $\rho := A_s \cdot (b \cdot d)^{-1}$ $\rho = 0.0019$

Compression block location: (for rectangular section) $k := \sqrt{(n \cdot \rho)^2 + 2 \cdot n \cdot \rho} - n \cdot \rho$ $k = 0.3$

Check Compression block: $k \cdot d = 1.52\ in$ > $t_f = 1.3\ in$ => design as T-beam

T-beam Design

Compression block location : (for T-beam section) $k := \left[\rho \cdot n + 0.5 \cdot \left(\frac{t_f}{d}\right)^2\right] \cdot \left[\rho \cdot n + \left(\frac{t_f}{d}\right)\right]^{-1}$ $k = 0.3$

Lever arm : (for T-beam section) $j := \left[6 - 6 \cdot \frac{t_f}{d} + 2 \cdot \left(\frac{t_f}{d}\right)^2 + \left(\frac{t_f}{d}\right)^3 \cdot \frac{\rho \cdot n}{2}\right] \cdot \left(6 - 3 \cdot \frac{t_f}{d}\right)^{-1}$ $j = 0.894$

Miami Dade County Department of Regulatory And Economic Resources - Job Copy
0000331469 - 7/21/2016 2:19:15 PM
GENERAL01-08102015.pdf
Examiner Date Time Stamp Disp. Trade Stamp Name
Gloria Garcia 5/5/2016 10:20:11 AM MECH Approved

Resisting Moment : (Whichever is smaller)

$M_s := A_s \cdot f_s \cdot j \cdot d$ $M_s = 3.1\ Kip \cdot ft$

$M_m := f_{b.avail} \cdot \left(1 - \frac{t_f}{2 \cdot k \cdot d}\right) \cdot t_f \cdot j \cdot b \cdot d$ $M_m = 4.2\ Kip \cdot ft$

Checking: $M_{Resist} := \text{if}(M_m < M_s, M_m, M_s)$ $M_{Resist} = 3.1\ Kip \cdot ft$ > $M_{wall} = 1.3\ Kip \cdot ft$ => OK

OPENING SIDE REINF. 1 # 5 @ each side of opening

29/41

FERMIN A. MARTINEZ, P.E.
CONSULTING ENGINEER FL. P.E. No 19363
8340 SW 65TH AVE. UNIT 3
MIAMI, FL. 33143
Ph. 305-298-3216

Project: ELLAWISH LLC II
Date: 07/16/2015

Wall Footing 16" x 12" (Addition) :

- **General Data** :

Allowable Bearing Soil Capacity:	$Soil_{allow} := 2000psf$	Masonry self-weight:	$w_{wall} := 65psf$
Concrete strength :	$fc := 3000psi$	Clear Rebar Cover :	$cov := 3in$
Reinforcing Steel:	$fy := 60000psi$		$wc := 150pcf$

- Footing Dimensions :

Footing width :	$B_{foot} := 16in$
Footing Length : (Considering unit length)	$L_{foot} := 1ft$
Footing Height :	$H_{foot} := 12in$
Wall width :	$t_{wall} := 8in$
Wall Total Height :	$H_{Tot} := 9.66ft$
Wall Weight :	$w_{wall} := 65psf$
Tributary Length:	$L_{Tri} := 5.25ft$

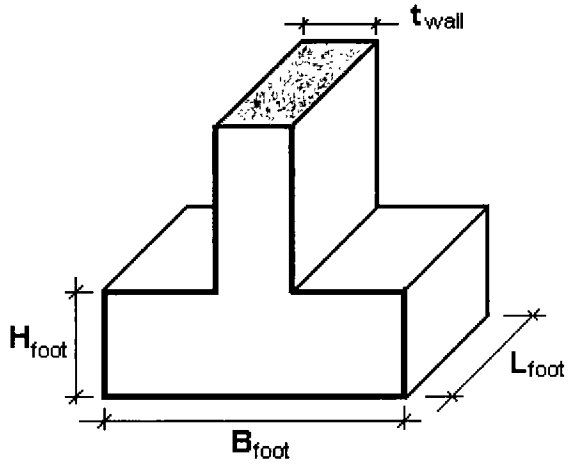

- Loads Analysis :

	Dead Load		Live Load	
Roof	$q_{R.DL} := Roof_{DL} L_{Tri}$	$q_{R.DL} = 131\ plf$	$q_{R.LL} := Roof_{LL} L_{Tri}$	$q_{R.LL} = 157.5\ plf$
Wall	$q_{W.DL} := H_{Tot} w_{wall}$	$q_{W.DL} = 627.9\ plf$		
Footing	$q_{F.DL} := wc \cdot H_{foot} \cdot B_{foot}$	$q_{F.DL} = 200\ plf$		
	$q_{T.DL} := q_{R.DL} + q_{W.DL} + q_{F.DL}$	$q_{T.DL} = 959\ plf$	$q_{T.LL} := q_{R.LL}$	$q_{T.LL} = 158\ plf$

Miami Dade County Department of Regulatory And Economic Resources - Job Copy
0000331469 - 7/21/2016 2:19:15 PM
GENERAL01-08102015.pdf
Examiner Date Time Stamp Disp. Trade Stamp Name
Gloria Garcia 5/5/2016 10:20:11 AM A MECH Approved

FERMIN A. MARTINEZ, P.E.
CONSULTING ENGINEER FL. P.E. No 19363
8340 SW 65TH AVE. UNIT 3
MIAMI, FL. 33143
Ph. 305-298-3216

Project: ELLAWISH LLC II
Date: 07/16/2015

Service Load : $Q_{serv} := q_{T.DL} + q_{T.LL}$ $Q_{serv} = 1117\ plf$

Factored Load : $Q_{fact} := 1.2q_{T.DL} + 1.6q_{T.LL}$ $Q_{fact} = 1403\ plf$

- Minimum Width Footing Checking :

$$B_{min} := \frac{Q_{serv} \cdot (1ft)}{Soil_{allow} \cdot L_{foot}}$$

$B_{min} = 0.56\ ft$ < $B_{foot} = 1.33\ ft$ $\frac{B_{min}}{B_{foot}} =< 1$

$\frac{0.58}{1.33} =< 1$

- Concrete Shear Checking :

Factor Resistance : $\phi := 0.85$

Factored Shear : $Vu_{foot} := Q_{fact} \cdot \left(\frac{B_{foot} - t_{wall}}{2}\right)$ $Vu_{foot} = 0.5\ Kip$

$\phi Vn_{foot} := \left[\phi \cdot 2 \cdot \sqrt{fc \cdot (psi)} \cdot H_{foot} \cdot 1ft\right]$ $\phi Vn_{foot} = 13.4\ Kip$

$Vu_{foot} < \phi Vn_{foot} = 1$ IF =0, increase the depth of footing

Miami Dade County Department of Regulatory And Economic Resources - Job Copy
0000331469 - 7/21/2016 2:19:15 PM
GENERAL01-08102015.pdf
Examiner Date Time Stamp Disp Mode Stamp Name
Gloria Garcia 5/5/2016 10:20:11 AM A MECH Approved

Use WF - 16 x 12

Footing Reinforcing

2 - #5 cont. bottom

Product Approval
USER: Public User

Search Criteria Refine Search

Code Version	2010	FL#	16294
Application Type	ALL	Product Manufacturer	ALL
Category	ALL	Subcategory	ALL
Application Status	ALL	Compliance Method	ALL
Quality Assurance Entity	ALL	Quality Assurance Entity Contract Expired	ALL
Product Model, Number or Name	ALL	Product Description	ALL
Approved for use in HVHZ	ALL	Approved for use outside HVHZ	ALL
Impact Resistant	ALL	Design Pressure	ALL
Other	ALL		

Search Results - Applications

FL#	Type	Manufacturer	Validated By	Status
FL16294	New	Nu-Vue Industries Inc. **Category:** Structural Components **Subcategory:** Wood Connectors	Jesus Gonzalez, P.E. (704) 827-1769	Approved

*Approved by DBPR. Approvals by DBPR shall be reviewed and ratified by the POC and/or the Commission if necessary.

The State of Florida is an AA/EEO employer. Copyright 2007-2013 State of Florida. :: Privacy Statement :: Accessibility Statement :: Refund Statement

Under Florida law, email addresses are public records. If you do not want your e-mail address released in response to a public-records request, do not send electronic mail to this entity. Instead, contact the office by phone or by traditional mail. If you have any questions, please contact 850.487.1395. *Pursuant to Section 455.275(1), Florida Statutes, effective October 1, 2012, licensees licensed under Chapter 455, F.S. must provide the Department with an email address if they have one. The emails provided may be used for official communication with the licensee. However email addresses are public record. If you do not wish to supply a personal address, please provide the Department with an email address which can be made available to the public. To determine if you are a licensee under Chapter 455, F.S., please click here.

Product Approval Accepts:

Credit Card SAFE

Miami Dade County Department of Regulatory And Economic Resources – Job Copy
0000331469 – 7/21/2016 2:19:15 PM
GENERAL01-08102015.pdf

Examiner	Date Time Stamp	Disp.	Trade	Stamp Name
Gloria Garcia	5/5/2016 10:20:11 AM	A	MECH	Approved

VIPIN N. TOLAT, P.E.
Consulting Engineer

15123 Lantern Creek Lane,
Houston, TX. 77068-3831
TEL: 281-444-9183
Fax: 281-444-9184
Email: vtolat@sbcglobal.net

Engineering - Inspections & Product Approvals

32/41

ENGINEER'S EVALUATION REPORT # NU0413

CATEGORY: Structural Components
SUB CATEGORY: Metal Connectors

REPORT HOLDER:

NuVue Industries Inc;
1055 E. 29th Street,
Hialeah, FL. 33013
www.nu-vueindustries.com
nuvue@bellsouth.net
Phone: 305-694-0397
Fax: 305-694-0398

1.0 EVALUATION SCOPE:
Compliance with 2010 Florida Building Code- Building and Residential

2.0 PRODUCT DESCRIPTION:

Refer to tables 1 through 21 of this report for Product name, size, size and number of fasteners, fastening details shown in the diagrams and the allowable loads.

3.0 STRUCTURAL SPECIFICATIONS :

1. Steel shall conform to ASTM A653, SS grade 33, min. yield 33 ksi, min. tensile strength 45 ksi and min. galvanized coating of G 60 per ASTM A653.
2. Allowable loads and fasteners are based on NDS 2005.
3. Design loads are for S. Pine, specific gravity 0.55. Design loads for other species shall be adjusted per NDS 2005.
4. Allowable uplift loads have been adjusted for load duration factor CD of 1.6. Allowable gravity loads have been adjusted for CD values of 1.0, 1.15 and 1.25 per table 2.3.2 of NDS 2005. Design loads do not include 33% increase for steel and concrete.
5. Concrete in Tie beams shall be min. of 2500 psi. Concrete Masonry, Grout and mortar in concrete masonry shall be min. of 1500 psi. Concrete masonry shall comply with ASTM C90.
6. Combined load of Uplift, L1 and L2 shall satisfy the following equation.

$$\frac{\text{Actual Uplift}}{\text{Allowable Uplift}} + \frac{\text{Actual L1}}{\text{Allowable L1}} + \frac{\text{Actual L2}}{\text{Allowable L2}} \leq 1.0$$

Miami Dade County Department of Regulatory And Economic Resources - Job Copy
0000331469 - 7/21/2016 2:19:15 PM
GENERAL01-08102015.pdf

Examiner	Date Time Stamp	Disp.	Trade	Stamp Name
Gloria Garcia	5/5/2016 10:20:11 AM	A	MECH	Approved

4.0 INSTALLATION

Installation shall be in accordance with this report and the latest edition of Nu-Vue Industries Catalog. The information in this report supercedes any conflicting information in the catalog.

5.0 EVIDENCE SUBMITTED:

Test reports submitted by Product testing Inc, (PT) Atec Associates Inc(Atec) and PSI Inc and signed and sealed calculations in conformance with FBC 2010 by Vipin N. Tolat, P.E.

Product tested	Test #/Test lab	Date Tested
NVTA/NVTAS	02-3938/PT	8/6/02
NVTA/NVTAS	02-4073/PT	11/6/02
NVTA/NVTAS	02-4074/PT	11/6/02
NVTA/NVTAS	02-4075/PT	11/6/02
NVTA/NVTAS	31.22456.0002/ATEC	7/6/02
NVBH 24	02-4096/PT	12/3/02
NVUH 26	02-4095/PT	1/17/03
NVRT	03-4177/PT	2/3/03
NVRT	03-4202/PT	2/19/03
NVRT	03/4270,4271/PT	3/27/03
NVTH/NVTHS	04-4698/PT	4/15/04
NVSNP3	03-4482/PT	9/15/03
NV358	03/4543/PT	12/19/03
NV458	03-4590/PT	12/31/03
NVHCL/R	03-4625/PT	1/21/04
NVSTA/NVHTA	04-4641,4642/PT	3/17&3/22/04
NVJH24,26,28	03-4385,86,87/PT	5/30/03
NVSO236	03-4349,57,58/PT	5/13,5/19,5/20/03
NVTP4	03-4303,44/PT	4/21, 5/1/03
NVTP4H	03-4345,43/PT	5/2, 5/5/03
NVHC43,43/2	70-02-94-00381/ATEC	11/27/95
AB5	05-5195,95A/PT	2/15/08
AB7	05-5196,96A/PT	2/15/08
NVHC37	03697.0001/ATEC	11/27/96
IKE1	05-5612/PT	3/20/06
IKE2	06-5622/PT	5/1/06
NVTH026	04-4996/PT& 138-96013-05/PSI	1/31/05&2/7/89
NVTHJ28	04-4996/PT& 138-96013-05/PSI	1/31/05&12/2/89

Miami Dade County Department of Regulatory And Economic Resources Job Copy
0000331469 - 7/21/2016 2:19:15 PM
GENERAL01-08102015.pdf
Examiner Date Time Stamp Disp. Trade Stamp Name
Gloria Garcia 5/5/2016 10:20:11 AM A MECH Approved

6.0 DESIGN:

1 Maximum allowable loads shall not exceed the allowable loads listed in this report. Allowable loads are based on allowable stress design per NDS.
2. Capacity of wood members is not covered by this report. Allowable loads shall not exceed the capacity of wood members. Capacity of wood members shall be checked by Engineer/Architect of record.
3. Wood members with which the connectors are used must be nominal dimension lumber or approved structural composite lumber.

7.0 CODITIONS OF USE:

1. NuVue Industries metal structural connectors described in this report comply with or are suitable alternative to what is specified in section 1.0 of this report.
2. Design loads must be less than the allowable loads shown in all the tables of this report.
3. The connectors must be manufactured, identified and installed in accordance with this report and the manufacturer's instructions.
4. Products covered by this report are manufactured by NuVue industries Inc in Hialeah, Florida under a quality control program with inspections by NAMI Inc having State of Florida license # QUA 1789.

Vipin N. Tolat, P.E.
Florida P.E. # 12847
4/15/2013

vnt/nu0413

VIPIN N. TOLAT
LICENSE
No. 12847
STATE OF
FLORIDA
PROFESSIONAL ENGINEER

Miami Dade County Department of Regulatory And Economic Resources – Job Copy
0000331469 – 7/21/2016 2:19:15 PM
GENERAL01-08102015.pdf

Examiner	Date Time Stamp	Disp.	Trade	Stamp Name
Gloria Garcia	5/5/2016 10:20:11 AM	A	MECH	Approved

TABLE 4
NVRT – Flat and Twisted Rafter Ties 1"x14 G

Length (in)	Product Code	Gauge
12	NVRT-12	14
16	NVRT-16	14
18	NVRT-18	14
20	NVRT-20	14
22	NVRT-22	14
24	NVRT-24	14
30	NVRT-30	14
36	NVRT-36	14
48	NVRT-48	14

NVRT Wood to Wood

16d Fasteners		Maximum Uplift Load (lbs)	
TOTAL	In each member*	Flat Ties	Twisted Ties
6	3	588 [5]	588 [5]
8	4	725	724
10	5	861	860
12	6	998	996
14	7	1135	1132

NVRT Wood to Concrete

No. of 16d nails to Wood Framing	No. of ¼" diameter Tapcons to Concrete	Maximum Uplift Load (lbs)
3	3	588 [5]
4	4	722
5	4	856
6	5	991
7	5	1125

Notes:

1. Specify "F" for Flat and "T" for Twisted when ordering.
2. Fastener values are based on a minimum 1½" thick wood members.
3. * Indicates no. of nails in each connected wood member.
4. ITW tapcons shall be embedded a minimum of 1¼" into concrete tiebeam or tiebeam formed with concrete filled masonry. ITW tapcons shall have a min. edge distance of 2½" and minimum staggered spacing of ¾" as shown.
5. Use only in Non-HVHZ.
6. For Uplift loads C_D=1.6

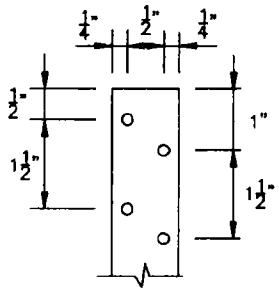

NVRT Anchor Holes dia. 3/16"

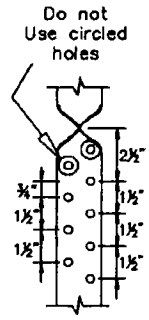

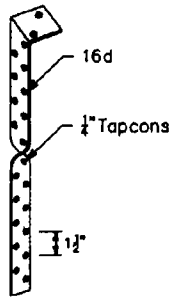

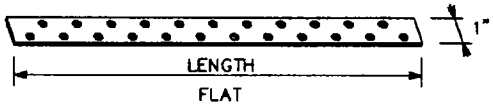

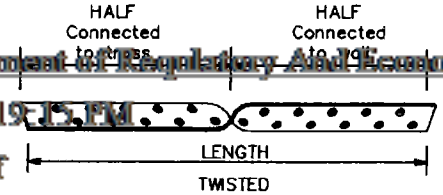

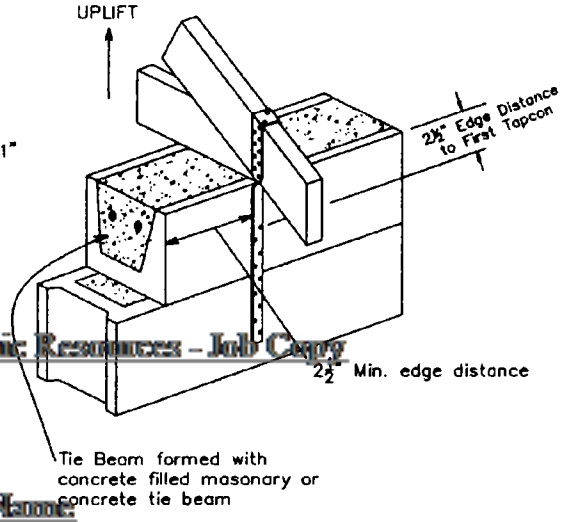

Miami Dade County Department of Regulatory And Economic Resources – Job Copy
0000331469 – 7/21/2016 2:19:15 PM
GENERAL01-08102015.pdf
Examiner Date Time Stamp Disp. Trade Stamp Name
Gloria Garcia 5/5/2016 10:20:11 AM A MECH Approved

TABLE 12

JOIST SUPPORTS

18 G NVJH JOIST SUPPORTS										Allowable Loads (lbs)		
Product Code	Dimension (inches)			Joist Size	Double Header Size	Single Header Size	Fasteners			Gravity Loads 100%		Uplift Loads 160%
	W	H	BS				Double Header	Single Header	Joists	Double Header	Single Header	Single & Double Headers
NVJH24	1 5/8	3 5/8	3	2x4 2x6	2–2x4 2–2x6	2x4 2x6	6–10d	6–10d x 1½"	4–10d x 1½"	744	744	493*
NVJH26	1 5/8	5	3	2x6 2x8	2–2x6 2–2x8	2x6 2x8	10–10d	10–10d x 1½"	6–10d x 1½"	1240	1240	821
NVJH28	1 5/8	6 3/4	3	2x8 2x10 2x12	2–2x8 2–2x10 2–2x12	2x8 2x10 2x12	14–10d	14–10d x 1½"	7–10d x 1½"	1736	1736	1079

* Use only in non–HVHZ

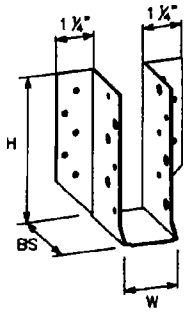

NVJH 26 as shown
NVJH 24 & 28 similar but with different holes.

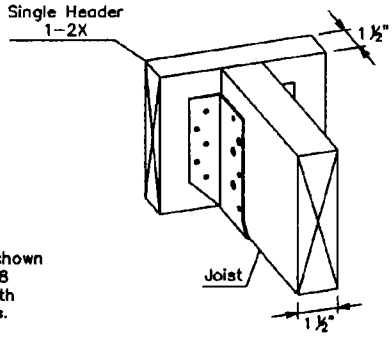

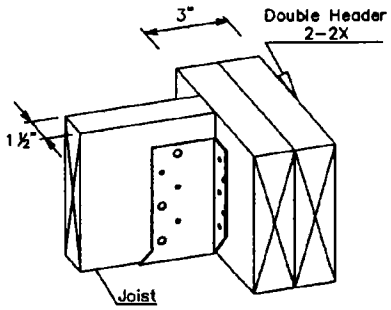

TABLE 13

NVSO 236, 16 GAUGE, HEAVY DUTY FACE MOUNT JOIST HANGER

Joist Size	Header Size	Fasteners		Allowable Loads (Lbs.)	
		Header	Joist	GRAVITY C_D=1.0	Uplift C_D=1.6
2x6–8	2–2x8 2–2x10 2–2x12	14–10d	6–10d	1758	1108
		14–16d	6–16d	1875	1279
		4–⅜"x 3" Lag Screws	6–16d	808	1217

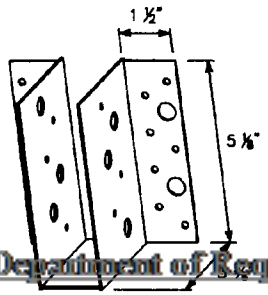

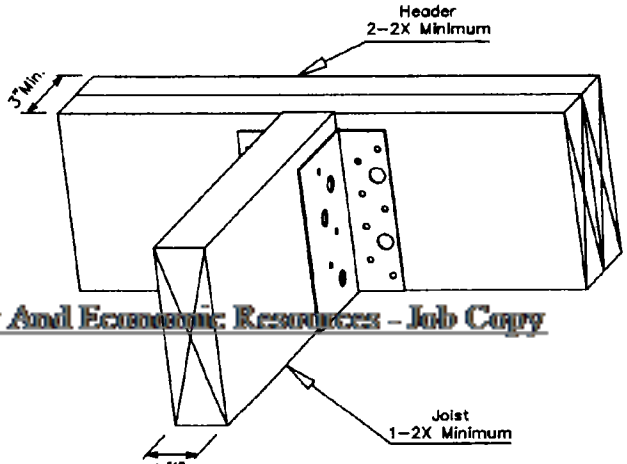

BOLT HOLES 1/2" DIA.
NAIL HOLES 5/16" DIA.

Miami Dade County Department of Regulatory And Economic Resources – Job Copy
0000331469 – 7/21/2016 3:19:15 PM
GENERAL01-08102015.pdf
Examiner Date Time Stamp Disp. Trade Stamp Name
Gloria Garcia 5/5/2016 10:20:11 AM A MECH Approved

ESR-2549

Used for Florida State Wide Product Approval #

FL10655

SIMPSON Strong-Tie®

SIMPSON STRONG-TIE COMPANY, INC

Products on this Report which are approved:

Product	FL#	Product	FL#	Product	FL#	Product	FL#
HHUS210-2	10655.1	HU36	10655.42	HUC44	10655.82	SUL210	10655.122
HHUS26-2	10655.2	HU38	10655.43	HUC46	10655.83	SUL210-2	10655.123
HHUS28-2	10655.3	HU410	10655.44	HUC48	10655.84	SUL214	10655.124
HHUS410	10655.4	HU412	10655.45	HUC610	10655.85	SUL24	10655.125
HHUS46	10655.5	HU414	10655.46	HUC612	10655.86	SUL26	10655.126
HHUS48	10655.6	HU416	10655.47	HUC614	10655.87	SUL26-2	10655.127
HSUL210-2	10655.7	HU44	10655.48	HUC616	10655.88	SUL414	10655.128
HSUL214-2	10655.8	HU46	10655.49	HUC66	10655.89	SUR210	10655.129
HSUL26-2	10655.9	HU48	10655.50	HUC68	10655.90	SUR210-2	10655.130
HSUL410	10655.10	HU610	10655.51	HUS210	10655.91	SUR214	10655.131
HSUL414	10655.11	HU612	10655.52	HUS210-2	10655.92	SUR24	10655.132
HSUL46	10655.12	HU614	10655.53	HUS212-2	10655.93	SUR26	10655.133
HSUR210-2	10655.13	HU616	10655.54	HUS26	10655.94	SUR26-2	10655.134
HSUR214-2	10655.14	HU66	10655.55	HUS26-2	10655.95	SUR414	10655.135
HSUR26-2	10655.15	HU68	10655.56	HUS28	10655.96	U210	10655.136
HSUR410	10655.16	HUC210-2	10655.57	HUS28-2	10655.97	U210-2	10655.137
HSUR414	10655.17	HUC210-3	10655.58	HUS410	10655.98	U210-3	10655.138
HSUR46	10655.18	HUC212-2	10655.59	HUS412	10655.99	U210R	10655.139
HU210	10655.19	HUC212-3	10655.60	HUS46	10655.100	U214	10655.140
HU210-2	10655.20	HUC214-2	10655.61	HUS48	10655.101	U24	10655.141
HU210-3	10655.21	HUC214-3	10655.62	LU210	10655.102	U24-2	10655.142
HU212	10655.22	HUC216-2	10655.63	LU24	10655.103	U24R	10655.143
HU212-2	10655.23	HUC216-3	10655.64	LU26	10655.104	U26	10655.144
HU212-3	10655.24	HUC24-2	10655.65	LU28	10655.105	U26-2	10655.145
HU214	10655.25	HUC26-2	10655.66	LUS210	10655.106	U26R	10655.146
HU214-2	10655.26	HUC28-2	10655.67	LUS210-2	10655.107	U310	10655.147
HU214-3	10655.27	HUC310	10655.68	LUS214-2	10655.108	U314	10655.148
HU216-3	10655.29	HUC310-2	10655.69	LUS24	10655.109	U34	10655.149
HU24-2	10655.30	HUC312	10655.70	LUS24-2	10655.110	U36	10655.150
HU26	10655.31	HUC312-2	10655.71	LUS26	10655.111	U410	10655.151
HU26-2	10655.32	HUC314	10655.72	LUS26-2	10655.112	U410R	10655.152
HU28	10655.33	HUC314-2	10655.73	LUS28	10655.113	U414	10655.153
HU28-2	10655.34	HUC316	10655.74	LUS28-2	10655.114	U44	10655.154
HU310	10655.35	HUC34	10655.75	LUS410	10655.115	U44R	10655.155
HU310-2	10655.36	HUC36	10655.76	LUS414	10655.116	U46	10655.156
HU312-2	10655.37	HUC38	10655.77	LUS44	10655.117	U46R	10655.157
HU314	10655.38	HUC410	10655.78	LUS46	10655.118	U610	10655.158
HU314-2	10655.39	HUC412	10655.79	LUS48	10655.119	U610R	10655.159
HU316	10655.40	HUC414	10655.80	MUS26	10655.120	U66	10655.160
HU34	10655.41	HUC416	10655.81	MUS28	10655.121	U66R	10655.161

Miami Dade County Department of Regulatory And Economic Resources - Job Copy
0000331469 7/21/2016 2:19:15 PM
GENERAL01 08102015.pdf
Examiner Date Time Stamp Disp. Trade Stamp Name
Gloria Garcia 5/5/2016 10:20:11 AM A MECH Approved

38/41

ES REPORT™

ICC Evaluation Service, Inc.
www.icc-es.org

Business/Regional Office # 5360 Workman Mill Road, Whittier, California 90601 # (562) 699-0543
Regional Office # 900 Montclair Road, Suite A, Birmingham, Alabama 35213 # (205) 599-9800
Regional Office # 4051 West Flossmoor Road, Country Club Hills, Illinois 60478 # (708) 799-2305

DIVISION: 06—WOOD AND PLASTICS
Section: 06090—Wood and Plastic Fastenings

REPORT HOLDER:

SIMPSON STRONG-TIE COMPANY, INC.
5956 WEST LAS POSITAS BOULEVARD
PLEASANTON, CALIFORNIA 94588
(800) 925-5099
www.strongtie.com

EVALUATION SUBJECT:

SIMPSON STRONG-TIE FACE-MOUNT HANGERS FOR WOOD FRAMING

1.0 EVALUATION SCOPE

Compliance with the following codes:

2006 *International Building Code*® (IBC)

2006 *International Residential Code*® (IRC)

Other Codes (see Section 8.0)

Properties evaluated:

Structural

2.0 USES

The Simpson Strong-Tie face-mount hangers described in this report are used as wood framing connectors in accordance with Section 2304.9.3 of the IBC. The products may also be used in structures regulated under the IRC when an engineered design is submitted in accordance with Section R301.1.3 of the IRC.

3.0 DESCRIPTION

3.1 General:

The Simpson Strong-Tie face-mount hangers described in this report are U-shaped hangers that have prepunched holes for the installation of nails into the face of the supporting wood header or beam or ledger.

3.1.1 LU Series Hangers: The LU series hangers are formed from No. 20 gage galvanized steel. See Table 1 for hanger dimensions, required fasteners, and allowable loads; and Figure 1 for a drawing of a typical LU series hanger.

3.1.2 U Series Hangers: The U series hangers are formed from No. 16 gage galvanized steel. See Table 2 for the hanger dimensions, required fasteners, and allowable loads; and Figure 2 for a drawing of a typical U series hanger.

3.1.3 HU/HUC Series Hangers: The HU and HUC series hangers are formed from No. 14 gage galvanized steel. HU hangers having a width equal to or greater than $2^{9}/_{16}$ inches (65 mm) are available with concealed flanges and are specified with the model designation HUC. See Table 3 for the hanger dimensions, required fasteners, and allowable loads; and Figure 3a for a drawing of a typical HU series hanger and Figure 3b for an HUC hanger.

3.1.4 LUS Series Hangers: The LUS series hangers are formed from No. 18 gage galvanized steel. The hangers have prepunched holes for the installation of nails that are driven at a 45-degree angle through the joist and into the header, which is described as double shear nailing in the installation instructions. See Table 4 for the hanger dimensions, required fasteners, and allowable loads; and Figure 4 for a drawing of a typical LUS series hanger.

3.1.5 MUS Joist Hanger: The MUS series hangers are formed from No. 18 gage galvanized steel. The U-shaped portion of the hangers has prepunched holes for the installation of joist nails that are driven at an angle through the joist and into the header, which is described as double shear nailing in the installation instructions. See Table 5 for the hanger dimensions, required fasteners, and allowable loads; Figure 5 for a drawing of a typical MUS series hanger.

3.1.6 HUS Series Hangers: The HUS series hangers are formed from No. 14 gage galvanized steel with the exception of the HUS26, HUS28 and HUS210 hangers, which are formed from No. 16 gage galvanized steel. The hangers have prepunched holes for the installation of joist nails that are driven at an angle through the joist and into the header, which is described as double shear nailing in the installation instructions. See Table 6 for the hanger dimensions, required fasteners, and allowable loads; and Figure 6 for a drawing of a typical HUS series hanger.

3.1.7 HHUS Series Hangers: The HHUS series hangers are formed from No. 14 gage galvanized steel. The hangers have prepunched holes for the installation of joist nails that are driven at an angle through the joist and into the header, which is described as double shear nailing in the installation instructions. See Table 7 for the hanger dimensions, required fasteners, and allowable loads; Figure 7 for a drawing of a typical HHUS series hanger.

3.1.8 SUR/L Series Hangers: The SUR/L series hangers are formed from No. 16 gage galvanized steel. SUR and SUL are mirror-image identical hangers, skewed at 45 degrees right and left, respectively. See Table 8 for the hanger dimensions, required fasteners, and allowable loads; and Figure 8 for a drawing of typical SUR/L series hangers.

3.1.9 HSUR/L Series Hangers: The HSUR/L series hangers are formed from No. 14 gage galvanized steel. SUR and SUL are mirror-image identical hangers, skewed at 45 degrees right and left, respectively. See Table 9 for the hanger dimensions, required fasteners, and allowable loads; and Figure 9 for a drawing of typical HSUR/L series hangers.

Miami Dade County Department of Regulatory and Economic Resources - Job Card
0000331469 , 7/21/2016 2:19:15 PM
GENERAL01-08102015.pdf
Examiner Date Time Stamp Dep. Trade Stamp Name
Gloria Garcia 7/21/2016 10:20:11 AM A MECH Approved

ES REPORTS™ are not to be construed as representing aesthetics or any other attributes not specifically addressed, nor are they to be construed as an endorsement of the subject of the report or a recommendation for its use. There is no warranty by ICC Evaluation Service, Inc., express or implied, as to any finding or other matter in this report, or as to any product covered by the report

Copyright © 2008

39/41

3.2 Materials:

3.2.1 Steel: The hangers described in this report are manufactured from galvanized steel complying with ASTM A 653, SS designation, Grade 33, with a minimum yield strength, F_y, of 33,000 psi (227 MPa) and a minimum tensile strength, F_u, of 45,000 psi (310 MPa). Minimum base-metal thicknesses for the hangers in this report are as follows:

NOMINAL THICKNESS (gage)	MINIMUM BASE-METAL THICKNESS (inch)
No. 14	0 0685
No. 16	0.0555
No. 18	0.0445
No. 20	0.0335

For **SI:** 1 inch = 25.4 mm.

The hangers have a minimum G90 zinc coating specification in accordance with ASTM A 653. Some models (designated with a model number ending with Z) are available with a G185 zinc coating specification in accordance with ASTM A 653. Some models (designated with a model number ending with HDG) are available with a hot-dip galvanization, also known as "batch" galvanization, in accordance with ASTM A 123, with a minimum specified coating weight of 2.0 ounces of zinc per square foot of surface area (600 g/m^2), total for both sides. Model numbers in this report do not include the Z or HDG ending, but the information shown applies. The lumber treater or holder of this report (Simpson Strong-Tie Company) should be contacted for recommendations on minimum corrosion resistance of steel connectors in contact with the specific proprietary preservative treated or fire retardant treated lumber.

3.2.2 Wood: Wood members with which the connectors are used must be either sawn lumber or engineered lumber having a minimum specific gravity of 0.50 (minimum equivalent specific gravity of 0.50 for engineered lumber), and having a maximum moisture content of 19 percent (16 percent for engineered lumber) except as noted in Section 4.1. The thickness of the supporting wood member (header, beam, or ledger) must be equal to or greater than the length of the fasteners specified in the tables in this report, or as required by wood member design, whichever is greater.

3.2.3 Fasteners: Nails used for hangers described in this report must comply with ASTM F 1667 and have the following minimum fastener dimensions and bending yield strengths (F_{yb}):

COMMON NAIL SIZE	SHANK DIAMETER (inch)	FASTENER LENGTH (inches)	F_{yb} (psi)
10d × 1$^1/_2$	0.148	1$^1/_2$	90,000
10d	0.148	3	90,000
16d × 2$^1/_2$	0.162	2$^1/_2$	90,000
16d	0.162	3$^1/_2$	90,000

For **SI:** 1 inch = 25.4 mm, 1 psi = 6.895 kPa.

Fasteners used in contact with preservative treated or fire retardant treated lumber must comply with IBC Section 2304.9.5 or IRC Section R319.3, as applicable. The lumber treater or this report holder (Simpson Strong-Tie Company) should be contacted for recommendations on minimum corrosion resistance of fasteners and connection capacities of fasteners used with the specific proprietary preservative treated or fire retardant treated lumber.

Miami Dade County Department of Regulatory And Economic Resources – Job Copy
0000331469 - 7/20/2016 2:19:15 PM
GENERAL01-08102015.pdf
Examiner Date Time Stamp Disp. Trade Stamp Name
Gloria Garcia 5/5/2016 10:20:11 AM A MECH Approval

4.0 DESIGN AND INSTALLATION

4.1 Design:

The tabulated allowable loads shown in this report are based on allowable stress design (ASD) and include the load duration factor, C_D, corresponding with the applicable loads in accordance with the NDS.

Tabulated allowable loads apply to products connected to wood used under dry conditions and where sustained temperatures are 100°F (37.8°C) or less. When products are installed to wood having a moisture content greater than 19 percent (16 percent for engineered wood products), or where wet service is expected, the allowable loads must be adjusted by the wet service factor, C_M, specified in the NDS. When connectors are installed in wood that will experience sustained exposure to temperatures exceeding 100°F (37.8°C), the allowable loads in this report must be adjusted by the temperature factor, C_t, specified in the NDS.

Connected wood members must be analyzed for load-carrying capacity at the connection in accordance with the NDS.

4.2 Installation:

Installation of the connectors must be in accordance with this evaluation report and the manufacturer's published installation instructions. In the event of a conflict between this report and the manufacture's published installation instructions, this report governs.

5.0 CONDITIONS OF USE

The Simpson Strong-Tie face-mount hangers for wood-framed construction described in this report comply with, or are suitable alternatives to what is specified in, those codes listed in Section 1.0 of this report, subject to the following conditions:

5.1 The connectors must be manufactured, identified and installed in accordance with this report and the manufacturer's published installation instructions. A copy of the instructions must be available at the jobsite at all times during installation.

5.2 Calculations showing compliance with this report must be submitted to the code official. The calculations must be prepared by a registered design professional where required by the statues of the jurisdiction in which the project is to be constructed.

5.3 Adjustment factors noted in Section 4.1 and the applicable codes must be considered, where applicable.

5.4 Connected wood members and fasteners must comply, respectively, with Sections 3.2.2 and 3.2.3 of this report.

5.5 Use of connectors with preservative treated or fire retardant treated lumber must be in accordance with Section 3.2.1 of this report. Use of fasteners with preservative treated or fire retardant treated lumber must be in accordance with Section 3.2.3 of this report.

6.0 EVIDENCE SUBMITTED

Data in accordance with the ICC-ES Acceptance Criteria for Joist Hangers and Similar Devices (AC13), dated October 2006 (corrected March 2007).

7.0 IDENTIFICATION

The products described in this report are identified with a die-stamped label indicating the name of the manufacturer (Simpson Strong-Tie), the model number, and the number of an index evaluation report (ESR-2523) that is used as an identifier for the products recognized in this report.

8.0 OTHER CODES

8.1 Evaluation Scope:

In addition to the codes referenced in Section 1.0, the products in this report were evaluated for compliance with the requirements of the following codes:

40/41

2003 *International Building Code*® (2003 IBC)

2003 *International Residential Code*® (2003 IRC)

2000 *International Building Code*® (2000 IBC)

2000 *International Residential Code*® (2000 IRC)

1997 *Uniform Building Code*™ (UBC)

The products described in this report comply with, or are suitable alternatives to what is specified in, the codes listed above, subject to the provisions of Sections 8.2 through 8.7.

8.2 Uses:

8.2.1 2003 IBC, 2003 IRC, 2000 IBC, and 2000 IRC: See Section 2.0 of this report.

8.2.2 UBC: Replace the information in Section 2.0 with the following: Simpson Strong-Tie face-mount hangers are used as wood framing connectors in accordance with Section 2318.4.8 of the UBC.

8.3 Description:

8.3.1 2003 IBC and 2003 IRC: See Section 3.0 of this report.

8.3.2 2000 IBC and 2000 IRC: See Section 3.0 of this report, except modify Section 3.2.3 of this report to reference Section R323.3 of the IRC.

8.3.3 UBC: See Section 3.0 of this report, except modify the first sentence in the last paragraph of Section 3.2.3 as follows: Fasteners used in contact with preservative treated or fire retardant treated lumber must, as a minimum, comply with UBC Section 2304.3.

8.4 Design and Installation: 2003 IBC, 2003 IRC, 2000 IBC, 2000 IRC, and UBC:

See Section 4.0 of his report.

8.5 Conditions of Use:

8.5.1 2003 IBC, 2003 IRC 2000 IBC, and 2000 IRC: The Simpson Strong-Tie products described in this report comply with, or are suitable alternatives to what is specified in, those codes listed in Section 8.0, subject to the same conditions of use indicated in Section 5.0 of this report.

8.5.2 UBC: The Simpson Strong-Tie products described in this report comply with, or are suitable alternatives to what is specified in, the UBC, subject to the same conditions of use indicated in Section 5.0 of this report, except the last sentence of Section 5.5 is replaced with the following: Fasteners used in contact with preservative treated or fire retardant treated lumber must, as a minimum, comply with UBC Section 2304.3.

8.6 Evidence Submitted: 2003 IBC, 2003 IRC 2000 IBC, 2000 IRC, and UBC:

See Section 6.0 of this report.

8.7 Identification: 2003 IBC, 2003 IRC 2000 IBC, 2000 IRC, and UBC:

See Section 7.0 of this report.

Miami Dade County Department of Regulatory And Economic Resources – Job Copy
0000331469 – 7/21/2016 2:19:15 PM
GENERAL01-08102015.pdf

Examiner	Date Time Stamp	Disp.	Trade	Stamp Name
Gloria Garcia	5/5/2016 10:20:11 AM	A	MECH	Approved

41/41

TABLE 7—ALLOWABLE LOADS FOR THE HHUS SERIES HANGERS

MODEL NO.	DIMENSIONS[1] (inches)			COMMON NAILS[2] (Quantity-Type)		ALLOWABLE LOADS[3,4] (lbs)			
						Uplift[6]	Download		
	W	H	B	Header	Joist[5]	C_D = 1.33 or = 1.6	C_D = 1.0	C_D = 1.15	C_D = 1.25
HHUS26-2	$3^5/_{16}$	$5^7/_{16}$	3	14-16d	6-16d	1,550	2,580	2,965	3,225
HHUS28-2	$3^5/_{16}$	$7^1/_2$	3	22-16d	8-16d	2,000	3,885	4,470	4,855
HHUS210-2	$3^5/_{16}$	$9^1/_8$	3	30-16d	10-16d	2,855	5,190	5,900	5,900
HHUS46	$3^5/_8$	$5^1/_4$	3	14-16d	6-16d	1,550	2,580	2,965	3,224
HHUS48	$3^5/_8$	$7^1/_8$	3	22-16d	8-16d	2,000	3,885	4,470	4,855
HHUS410	$3^5/_8$	9	3	30-16d	10-16d	2,855	5,190	5,900	5,900

For **SI:** 1 inch = 25.4 mm, 1 lbf = 4.45 N

1. Refer to Figure 7 (this page) for definitions of hanger nomenclature (W, H, B).
2. Refer to Section 3.2.3 of this report for nail sizes and required minimum physical properties.
3. Tabulated allowable loads must be selected based on duration of load as permitted by the applicable building code.
4. Where HUS series hangers support solid-sawn joists having a maximum depth of 11 inches, they provide torsional resistance, which is defined as a moment of not less than 75 pounds (334 N) times the depth of the joist at which the lateral movement of the top or bottom of the joist with respect to the vertical position of the joist is 0.125 inch (3.2 mm).
5. Joist nails must be driven at a 45 degree angle through the joist into the header/beam to achieve the tabulated loads.
6. Allowable uplift loads have been increased for wind or earthquake loading with no further increase is allowed. The allowable uplift loads must be reduced when other load durations govern.

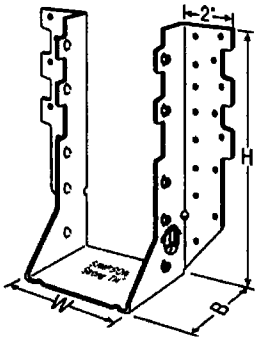

FIGURE 7—HHUS SERIS HANGER (see Table 7)

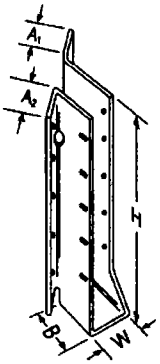

FIGURE 8—SUR/L SERIES HANGER (see Table 8)

TABLE 8—ALLOWABLE LOADS FOR THE SUR/SUL SERIES JOIST HANGERS

MODEL NO.	DIMENSIONS[1] (inches)					FASTENERS[2] (Quantity-Type)		ALLOWABLE LOADS[3,4] (lbs)			
								Uplift[5]	Download		
	W	H	B	A1	A2	Header	Joist	C_D = 1.33 or = 1.6	C_D = 1.0	C_D = 1.15	C_D = 1.25
SUR/L24	$1^9/_{16}$	$3^1/_{16}$	2	$1^1/_8$	1¼	4-16d	4-10dx$1^1/_2$	450	530	610	665
SUR/L26	$1^9/_{16}$	5	2	$1^1/_8$	$1^1/_4$	6-16d	6-10dx$1^1/_2$	720	800	960	1,000
SUR/L26-2	$3^1/_8$	$4^{15}/_{16}$	$2^5/_8$	$1^1/_2$	$2^3/_8$	8-16d	4-16dx$1^1/_2$	710	1,065	1,225	1,330
SUR/L210	$1^9/_{16}$	$8^3/_{16}$	2	$1^1/_8$	$1^1/_4$	10-16d	10-10dx$1^1/_2$	1,200	1,330	1,530	1,660
SUR/L214	$1^9/_{16}$	10	2	$1^1/_8$	$1^1/_4$	12-16d	12-10dx$1^1/_2$	1,440	1,595	1,835	1,995
SUR/L210-2	$3^1/_8$	$8^{11}/_{16}$	$2^5/_8$	$1^1/_2$	$2^3/_8$	14-16d	6-16dx$2^1/_2$	1,065	1,860	2,140	2,330
SUR/L414	$3^9/_{16}$	$12^1/_2$	$2^5/_8$	1	$2^3/_8$	18-16d	8-16dx$2^1/_2$	1,420	2,395	2,500	2,500

For **SI:** 1 inch = 25.4 mm, 1 lbf = 4.45 N

1. Refer to Figure 8 (this page) for definitions of hanger nomenclature (W, H, B). These hangers have a 45° skew.
2. Refer to Section 3.2.3 of this report for nail sizes and required minimum physical properties.
3. Tabulated allowable loads must be selected based on duration of load as permitted by the applicable building code.
4. Where SUR/L series hangers support solid-sawn joists, they provide torsional resistance, which is defined as a moment of not less than 75 pounds (334 N) times the depth of the joist at which the lateral movement of the top or bottom of the joist with respect to the vertical position of the joist is 0.125 inch (3.2 mm).
5. Allowable uplift loads have been increased for wind or earthquake loading with no further increase is allowed. The allowable uplift loads must be reduced when other load durations govern.

Miami Dade County Department of Regulatory And Economic Resources - Job Copy
0000331463 10/19/2016 2:19:12 PM
GENERAL01 08/10/2016 [illegible]
Examiner Date Time Stamp Dept Date Stamp Name
Gloria Garcia 5/5/2016 10:20:11 AM A MECH Approved

Fermin A. Martinez, P. E
Professional Engineer. №: 19363
8340 SW 65 Avenue, Unit 3
Miami, Florida 33143
Ph.: (305) 298-3216

AS BUILT CERTIFICATE

July 27, 2015

Metropolitan Dade County
Building and Zoning Department
11805 SW 26 ST
Miami, FL 33175

Re: As built plans for demolition / legalization for
Ellawish LLC
2419 NW 99th ST
Miami, FL 33147

Dear Sirs:

I hereby attest that, the structure is structurally sound and the addition satisfies the requirements of the Code in effect on this date, January 2010. My statement is based on the following detailed, methodology procedure:

FAMILY ROOM

FOUNDATIONS: Excavated next to footing and under to determine size, 16" x 12" continuous and used the James Rebar Data Scan Model C-4974 to detect the reinforcing, 2#5 continuous.

SLABS: Cored slab to verify size; 4" thick w/6 x 6 – 10/10 W. W. M.

ROOF FRAMING: Opened ceiling to verify size and spacing of joists; 2" x 8" @ 16" o/c anchored w/NVSTA – 16 strap @ each joist and R – 19 insulation.

STARTER COLUMNS: Verified size; 8" x 8" and used the James Rebar Data Scan Model C-4974 to detect the reinforcing, 2#5 vertical.

TIE COLUMNS: Verified size; 8" x 8" and used the James Rebar Data Scan Model C-4974 to detect the reinforcing, 1#5 vertical in poured block cells @ 4' – 0"o/c maximum and at openings.

Miami Dade County Department of Regulatory And Economic Resources - Job Copy
0000331469 10/20/15 2:15:16 PM
GENERAL01-08102015.pdf

Examiner	Date Time Stamp	Disp.	Trade	Stamp Name
Gloria Garcia	5/5/2016 10:20:11 AM	A	MECH	Approved

TIE BEAM: Opened drywall to verify size, 8" x 12" and used the James Rebar Data Scan Model C-4974 to determine reinforcing, 4#5 continuous. And #3 @ 48 " o.c

CEILING: Verified ½" Gypsum Board attached w/ ¼" screws @ 12" o/c to wood joists.

DRYWALL: Opened drywall to verify spacing of screws @ 12" o/c all around.

WINDOWS: Verified ¼" screws @ 8 ½" maximum from corners and 11" o/c maximum all around. The screws had a minimum embedment of 1 ¼". There is a 1 x 4 P.T. wood buck all around the window.

PLYWOOD SHEATHING: Cored roof to verify size and nailing; ⅝" thick w/ 8d nails @ 6" o/c.

ROOFING SYSTEM: Cored roofing to verify nailing of tin caps, 8d roofing nails @ 8" o/c.

The structure also complies with all requirements of the Florida Building Code 2010, with the permit application and any approved by the Building Official, if applicable.

FERMIN A. MARTINEZ
LICENSE
No. 19363
STATE OF FLORIDA
PROFESSIONAL ENGINEER

7/28/16

Fermin A. Martinez
P. E. №: 19363

FM/ym

Miami Dade County Department of Regulatory And Economic Resources – Job Copy
0000331469 – 7/21/2016 2:19:15 PM
GENERAL01-08102015.pdf

Examiner	Date Time Stamp	Disp.	Trade	Stamp Name
Gloria Garcia	5/5/2016 10:20:11 AM	A	MECH	Approved